DK 400 XL
COUNTER BANDSAW MACHINE
EXPLODED VIEWS


Temelsan

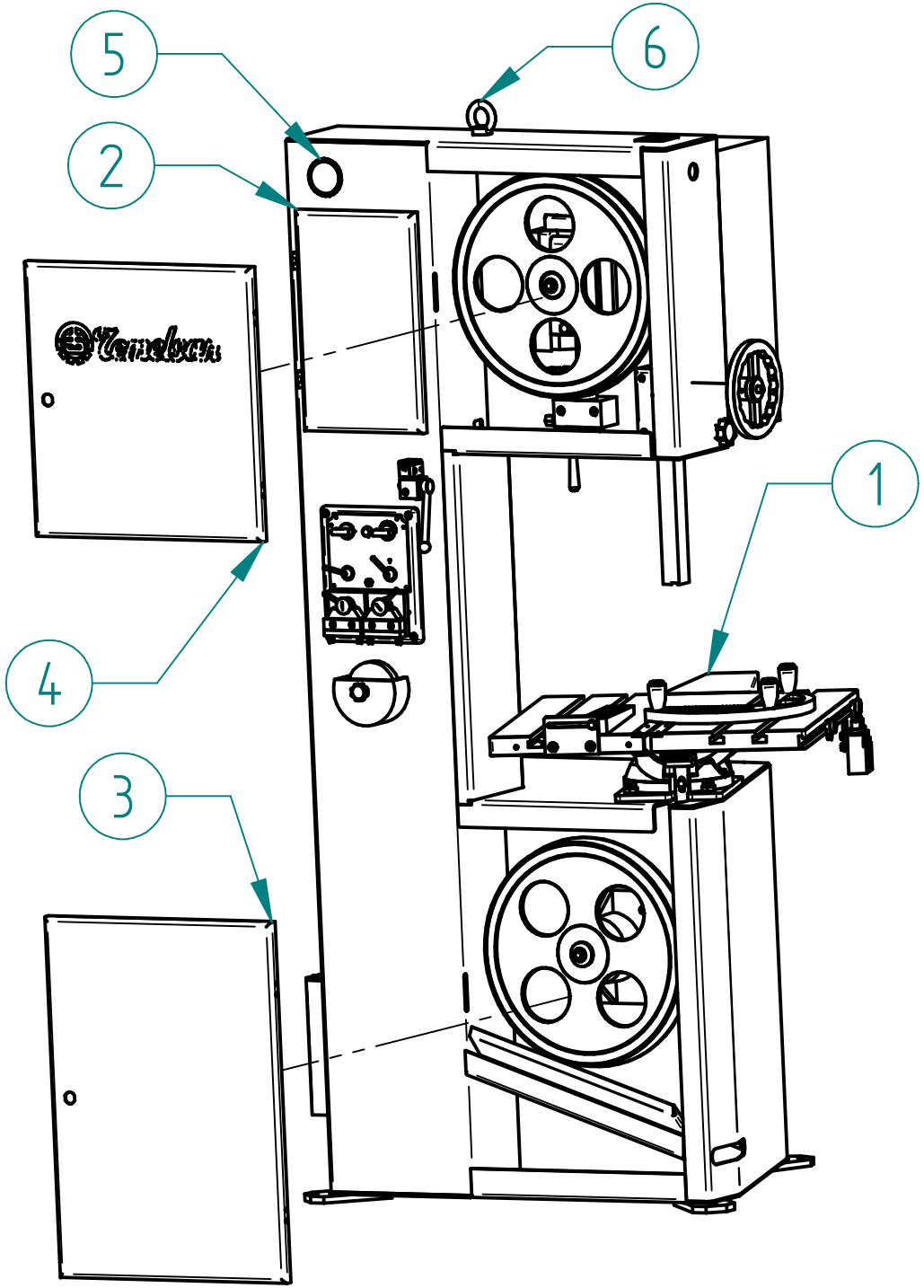

Item	File Name (no extension)	Quantity
	DK 400 XL	
1	DKO – HMT – 4 – HYDRAULIC MOTION TABLE 1	1
2	DK400-BC-CONTROL PANEL	1
3	DK400-BC-LOWER FRONT COVER	1
4	DK400-BC-UPPER FRONT COVER	1
5	KNS – 00162 – PRESSURE GAUGE FOR WELDER	1
6	GSP – 00752 – M16 EYE BOLT	1

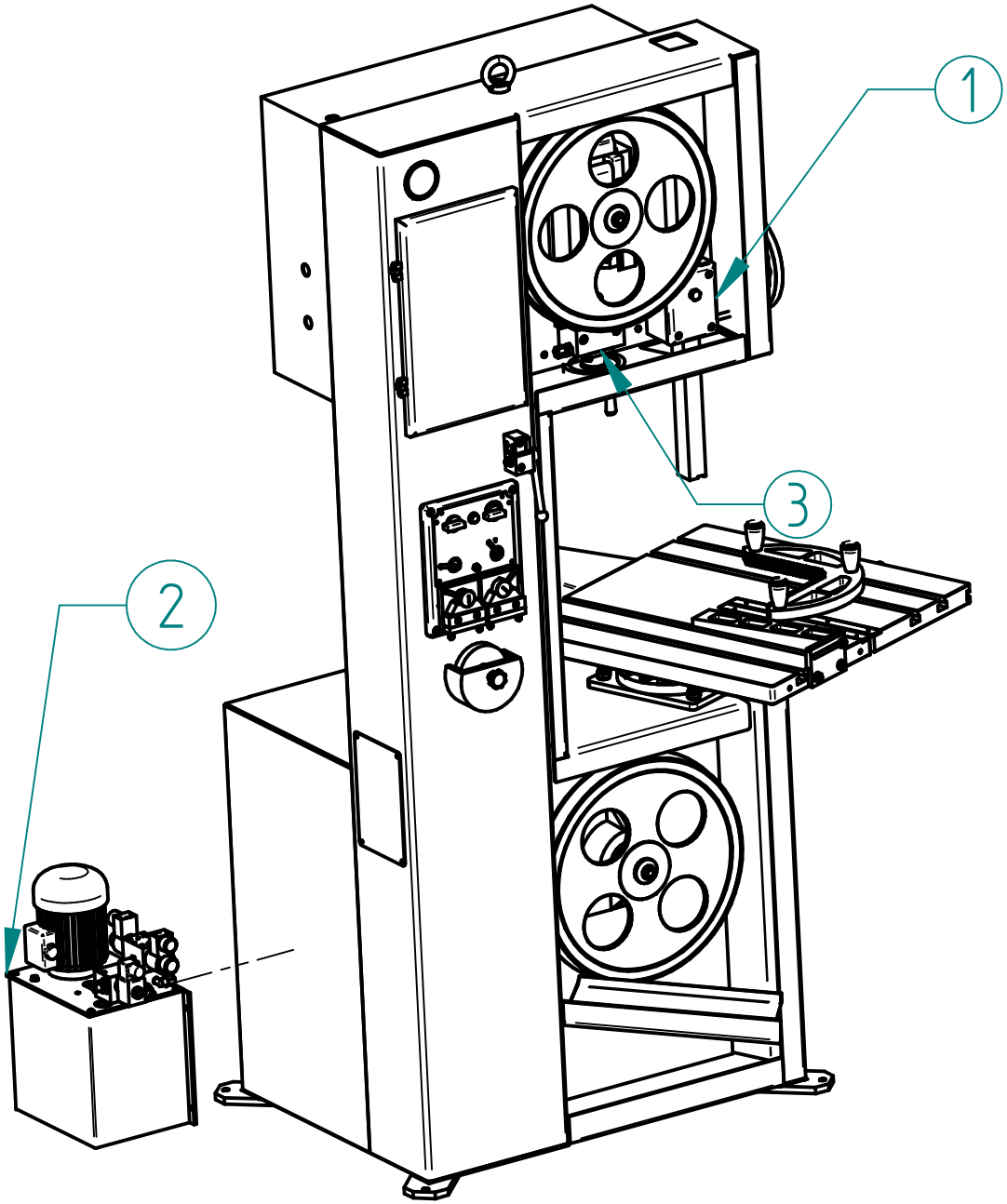

Item	File Name (no extension)	Quantity
	DK 400 XL	
1	DKS – 00090 – DK 400 POST ELEVATION GROUP	1
2	DKO – HMT – 4 – HYDRAULIC MOTION TABLE 2	1
3	DKS – 00277 – DK 400 XL MANUEL BANDSAW TENSION UNIT	1

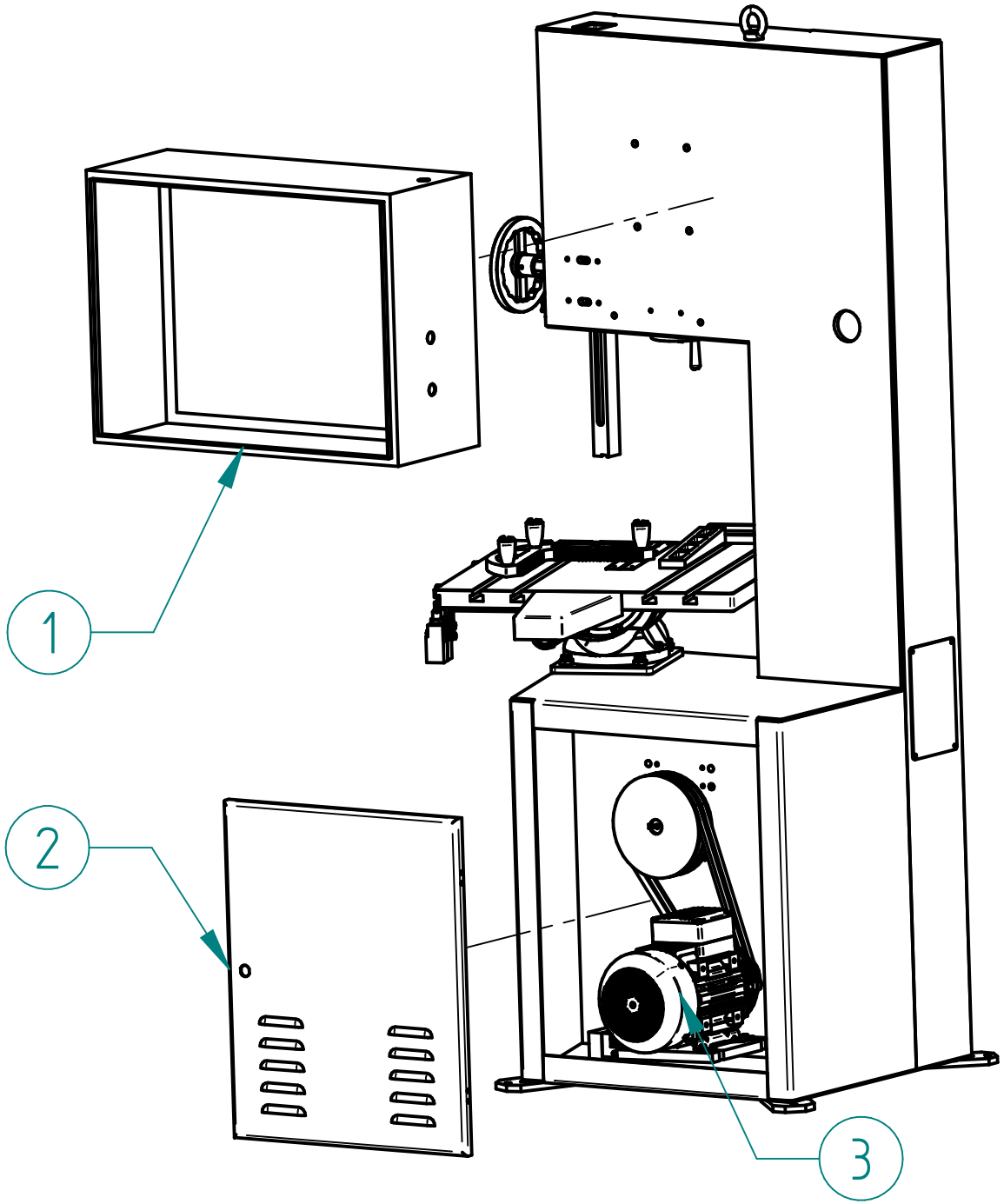

Item	File Name (no extension)	Quantity
	DK 400 XL HS	
1	DK400-BC-ELECTRIC CABINET	1
2	DK400-BC-BACK LOWER COVER	1
3	DK 400 XL HS MOTOR GROUP ASSEMBLY	1

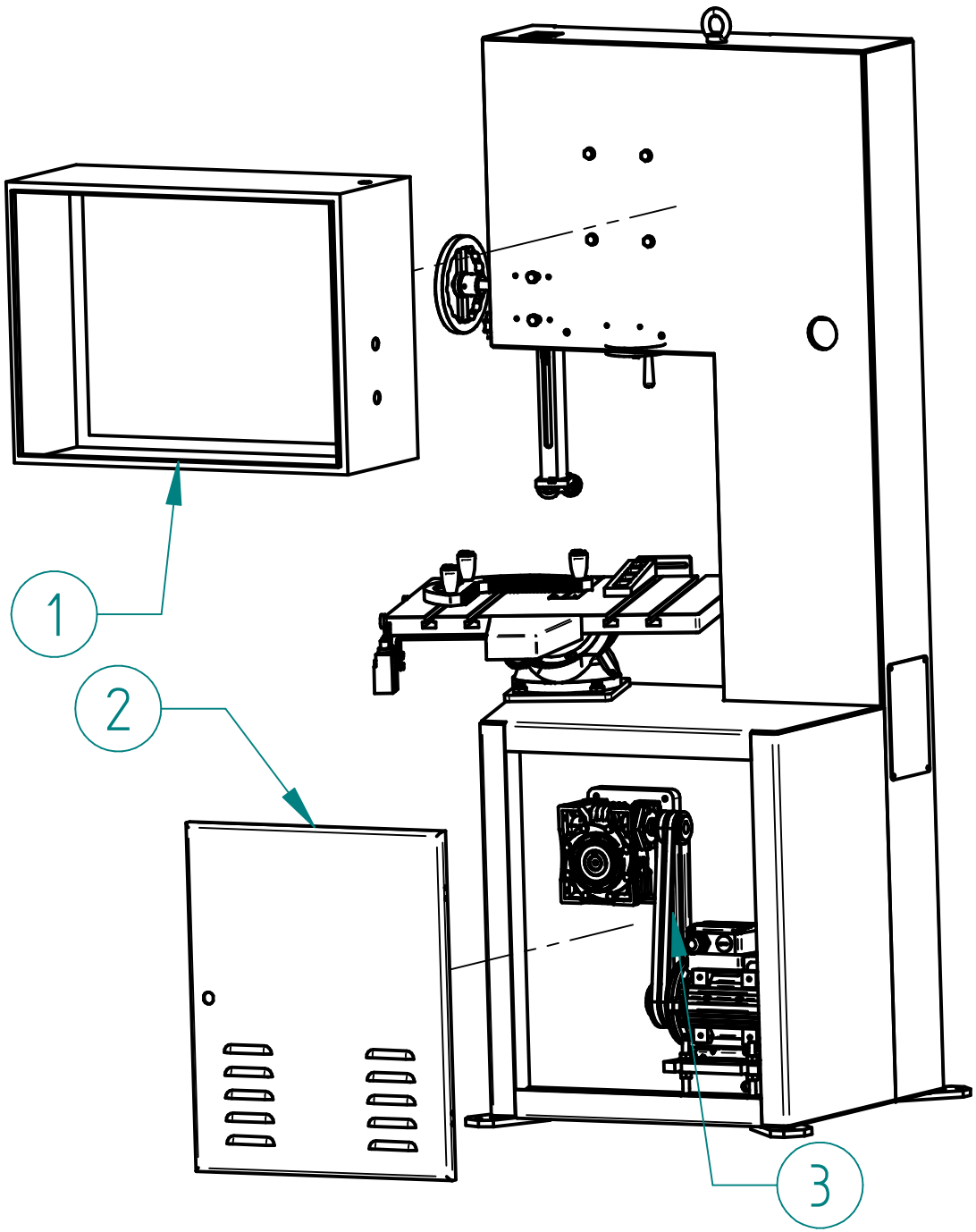

Item	File Name (no extension)	Quantity
	DK 400 XL LS	
1	DK400-BC-ELECTRIC CABINET	1
2	DK400-BC-BACK LOWER COVER	1
3	DK 400 XL LS MOTOR GROUP ASSEMBLY	1

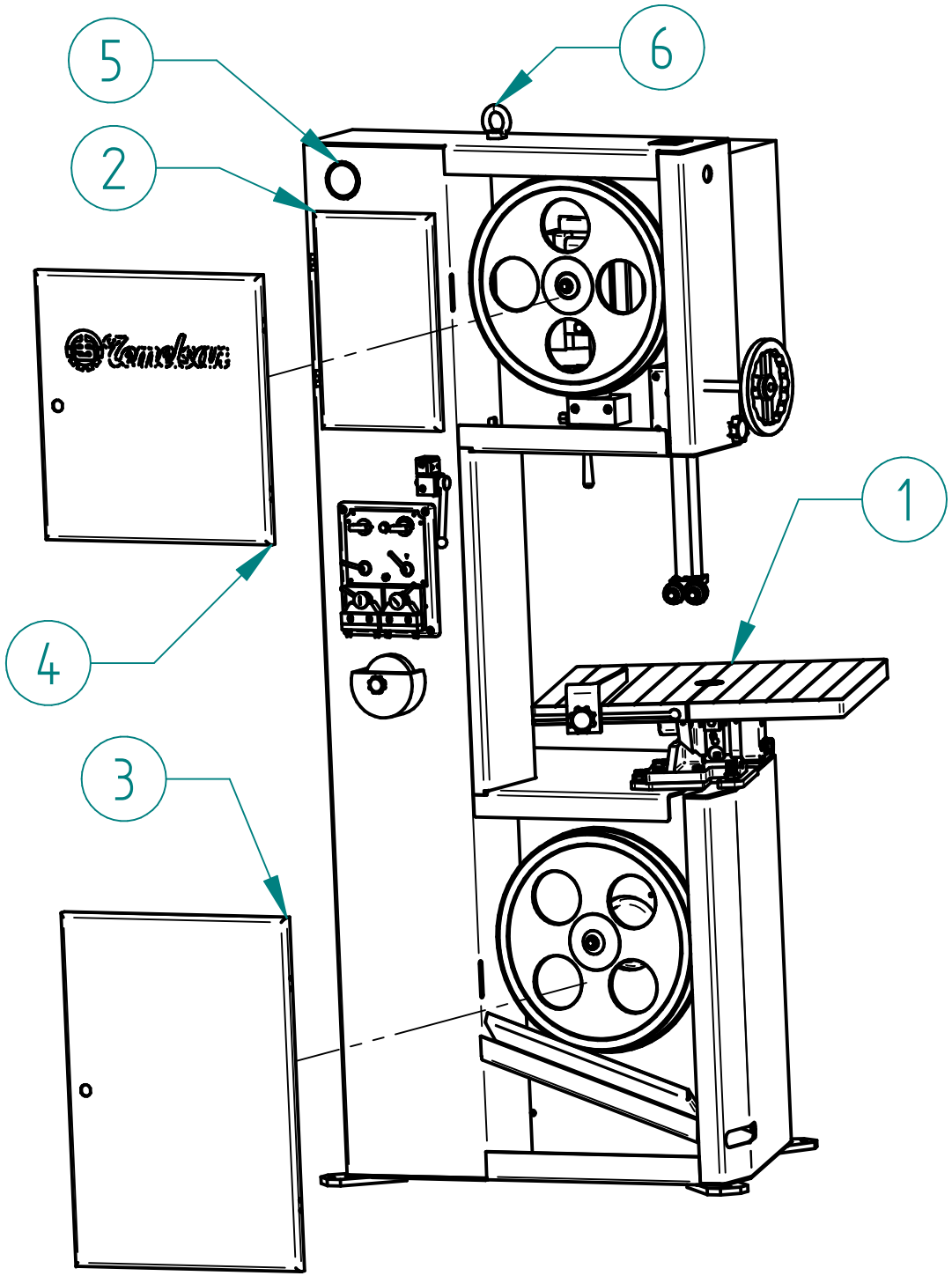

Item	File Name (no extension)	Quantity
	DK 400 XL FIXED TABLE HS_LS	
1	DKS – 00235 – DK 400 XL FIXED TABLE&ANGULATE TABLE EQUIPMENT	1
2	DK400-BC-CONTROL PANEL	1
3	DK400-BC-LOWER FRONT COVER	1
4	DK400-BC-UPPER FRONT COVER	1
5	KNS – 00162 – PRESSURE GAUGE FOR WELDER	1
6	GSP – 00752 – M16 EYE BOLT	1

DRIVING UNIT GROUP

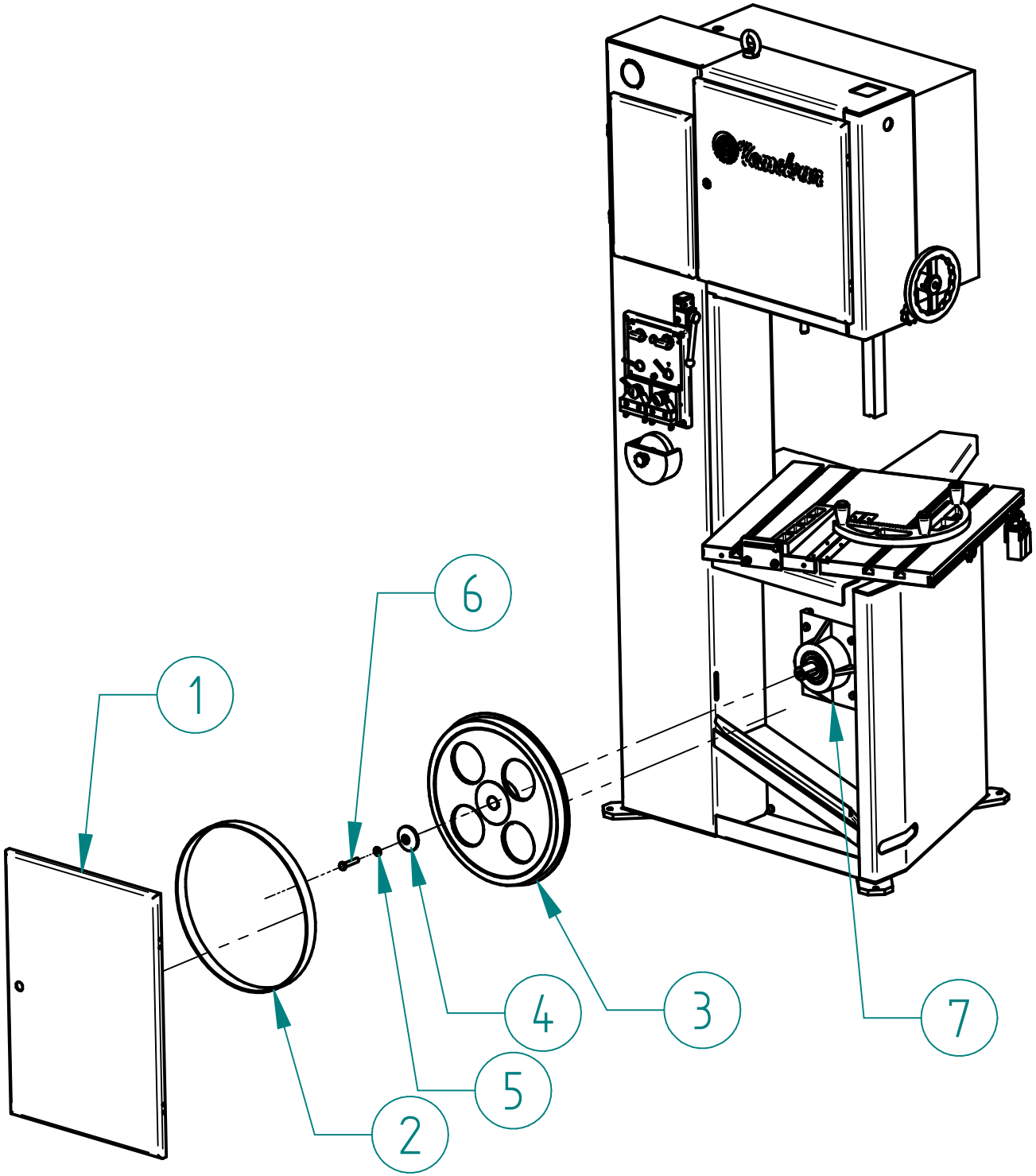

Item	File Name (no extension)	Quantity
	DK 400 XL HS	
1	DK400-BC-LOWER FRONT COVER	1
2	DKS - 00045 - BELT FOR 400mm WHEELS	1
3	DKS - 00095 - DK COUNTER DRIVE WHEEL	1
4	DKS - 00096 - Q10_5-60-12 WASHER	1
5	GSP - 00276 - M10 WASHER	1
6	GSP - 00159 - M10X50 HEXAGON BOLT	1
7	DKS - 00231 - DK 400 XL HS DRIVE WHEEL HOUSING AND SHAFT GROUP	1

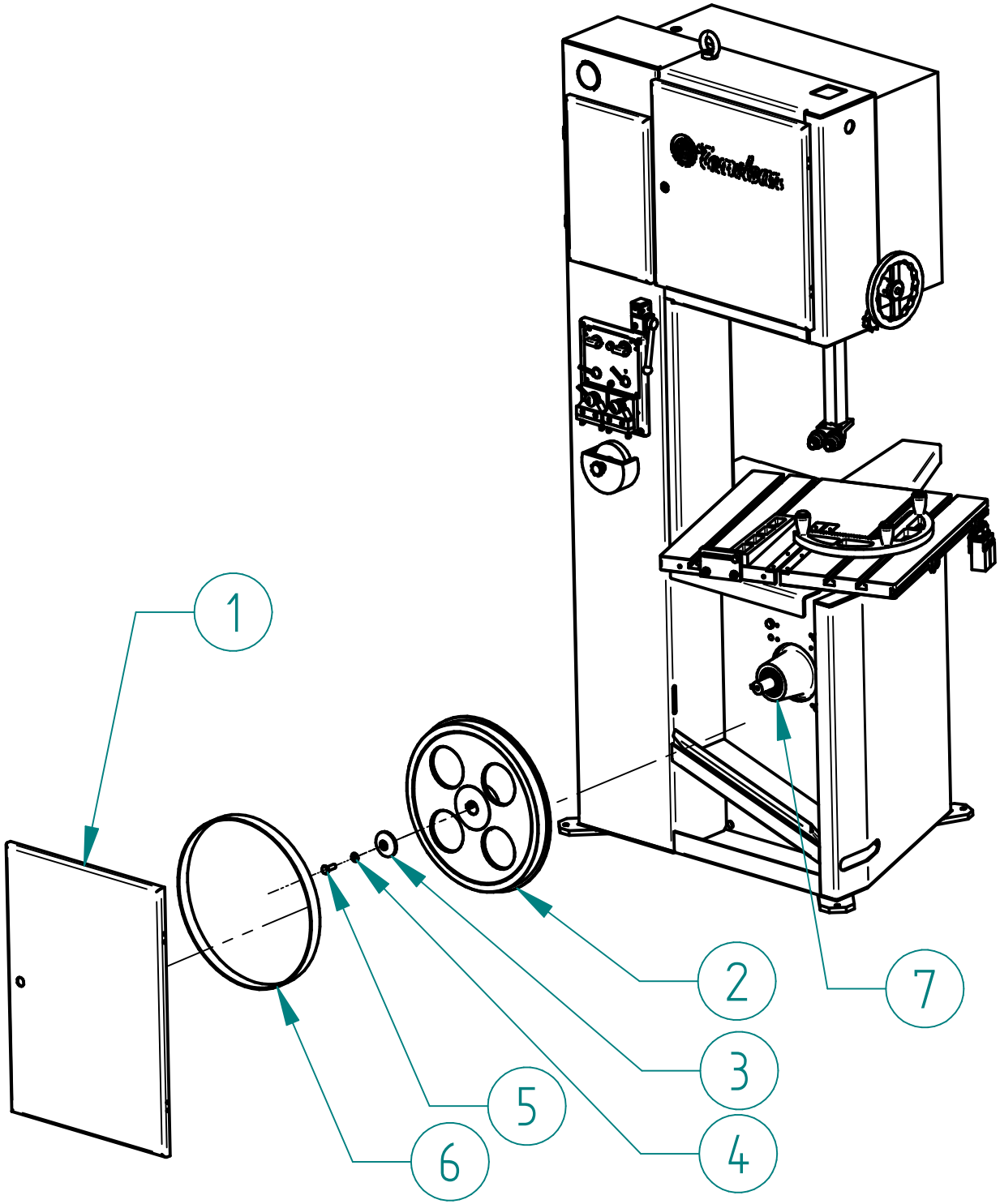

Item	File Name (no extension)	Quantity
	DK 400 XL LS	
1	DK400-BC-LOWER FRONT COVER	1
2	DKS - 00095 - DK COUNTER DRIVE WHEEL	1
3	DKS - 00096 - Q10_5-60-12 WASHER	1
4	GSP - 00276 - M10 WASHER	1
5	GSP - 00167 - M10x30 HEXAGON BOLT	1
6	DKS - 00045 - BELT FOR 400mm WHEELS	1
7	DKS - 00241 - DK 400 XL LS DRIVE WHEEL HOUSING AND SHAFT ASSEMBLY	1

HIGH SPEED DRIVING UNIT

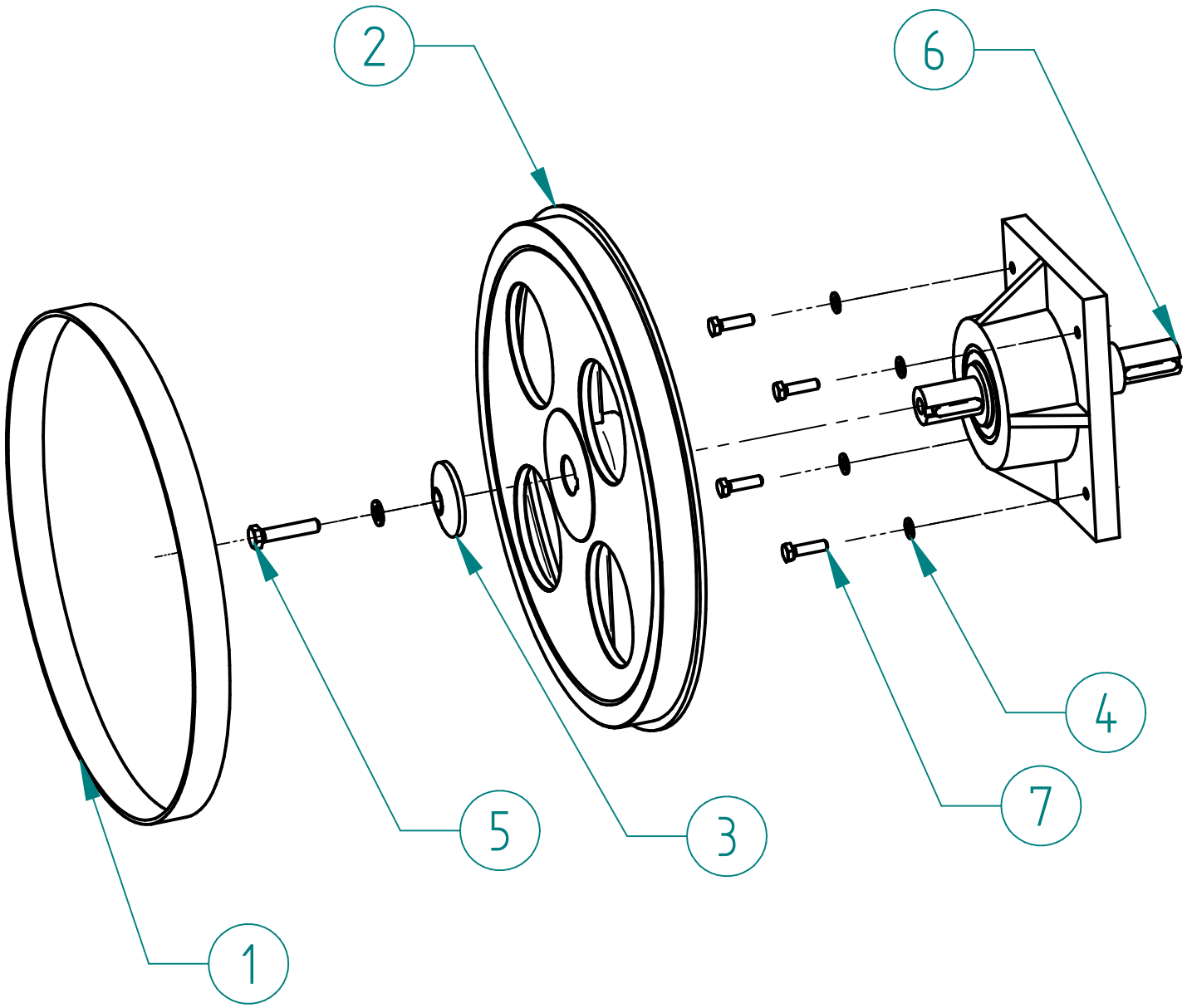

Item Number	File Name (no extension)	Quantity
	DK 400 XL HS DRIVE WHEEL FULL ASSEMBLY	
1	DKS – 00045 – BELT FOR 400mm WHEELS	1
2	DKS – 00095 – DK COUNTER DRIVE WHEEL	1
3	DKS – 00096 – Q10_5-60-12 WASHER	1
4	GSP – 00275 – M8 WASHER	4
5	GSP – 00159 – M10X50 HEXAGON BOLT	1
6	DKS – 00231 – DK 400 XL HS DRIVE WHEEL HOUSING AND SHAFT GROUP	1
7	GSP – 00141 – M8X30 HEXAGON BOLT	4
8	GSP – 00276 – M10 WASHER	1

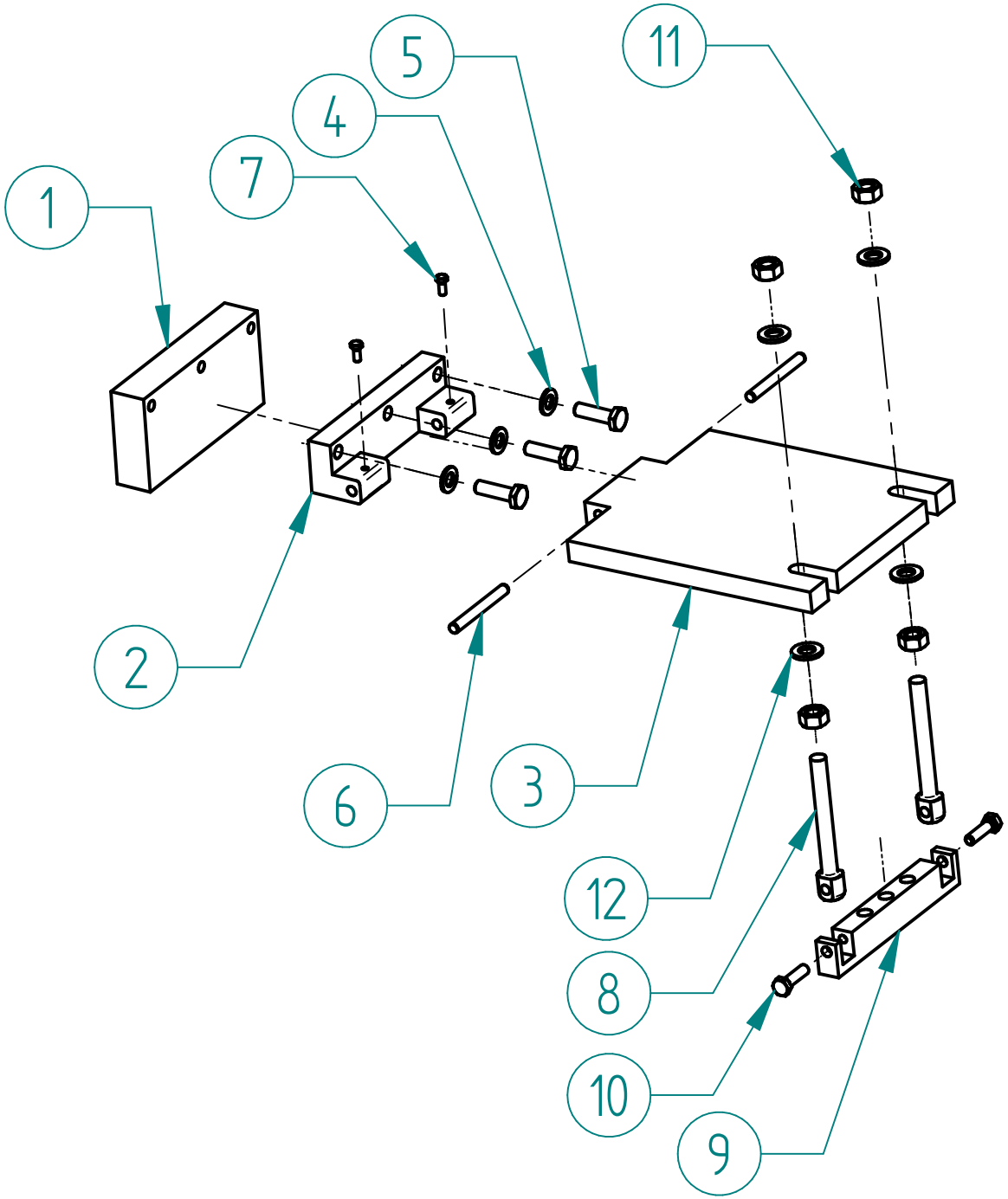

Item	File Name (no extension)	Quantity
	DK 400 XL HS MOTOR GROUP ASSEMBLY	
1	DKS – 00167 – DK 400 XL HS MOTOR MOUNTING PLATE CONNECTION LIM	1
2	DKS – 00104 – DK 400 XL MOTOR MOUNTING PLATE ASSEMBLY LIM	1
3	DKS – 00103 – DK 400 XL MOTOR MOUNTING PLATE	1
4	GSP – 00276 – M10 WASHER	3
5	GSP – 00168 – M10x35 HEXAGON BOLT	3
6	DKS – 00643 – DK 400 XL MOTOR MOUNTING PLATE Q8x90 PIN	2
7	GSP – 00942 – M5x12 HEXAGON BOLT	2
8	DKS – 00620 – DK 400_600_900 MOTOR MOUNTING PLATE TENSION SHAFT	2
9	DKS – 00102 – DK 400_600_900 MOTOR MOUNTING PLATE TENSION LIM	1
10	GSP – 00141 – M8X30 HEXAGON BOLT	2
11	GSP – 00260 – M12 NUT	4
12	GSP – 00277 – M12 WASHER	4

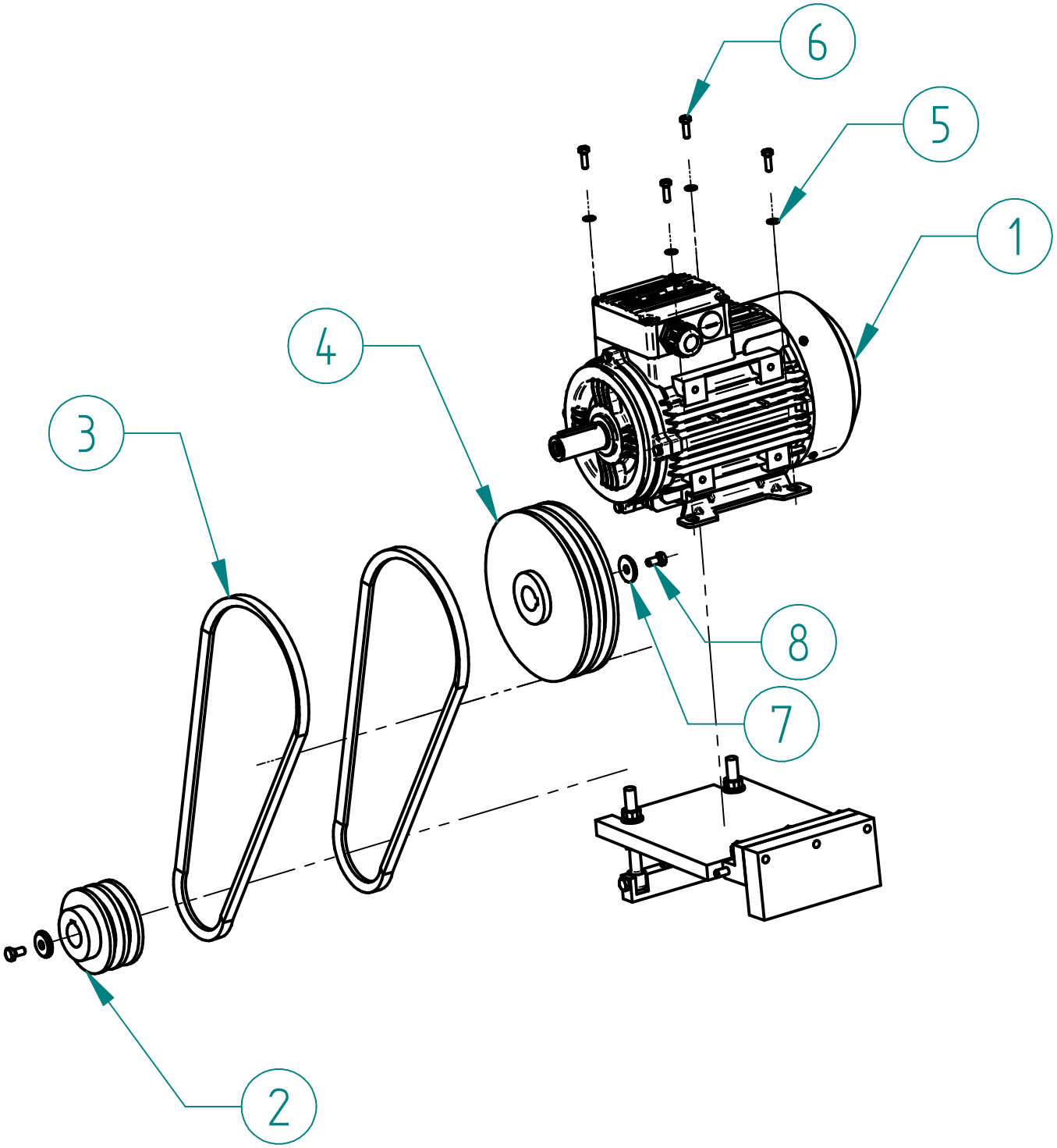

Item Number	File Name (no extension)	Quantity
	DK 400 XL HS MOTOR GROUP ASSEMBLY	
1	GSP – 00636 – 3EL100L4_PD_K1-A 3KW ELK MOTOR	1
2	DKS – 00166 – Q100 DOUBLE V BELT PULLEY	1
3	DKS – 00028 – DK 400 XL HS BELT	2
4	DKS – 00165 – Q200 DOUBLE V BELT PULLEY	1
5	GSP – 00274 – M6 WASHER	4
6	GSP – 00139 – M6x20 HEXAGON BOLT	4
7	DKS – 00133 – Q8_5-30-5 WASHER – DK 400 XL GEARBOX WASHER	2
8	GSP – 00140 – M8X16 HEXAGON BOLT	2

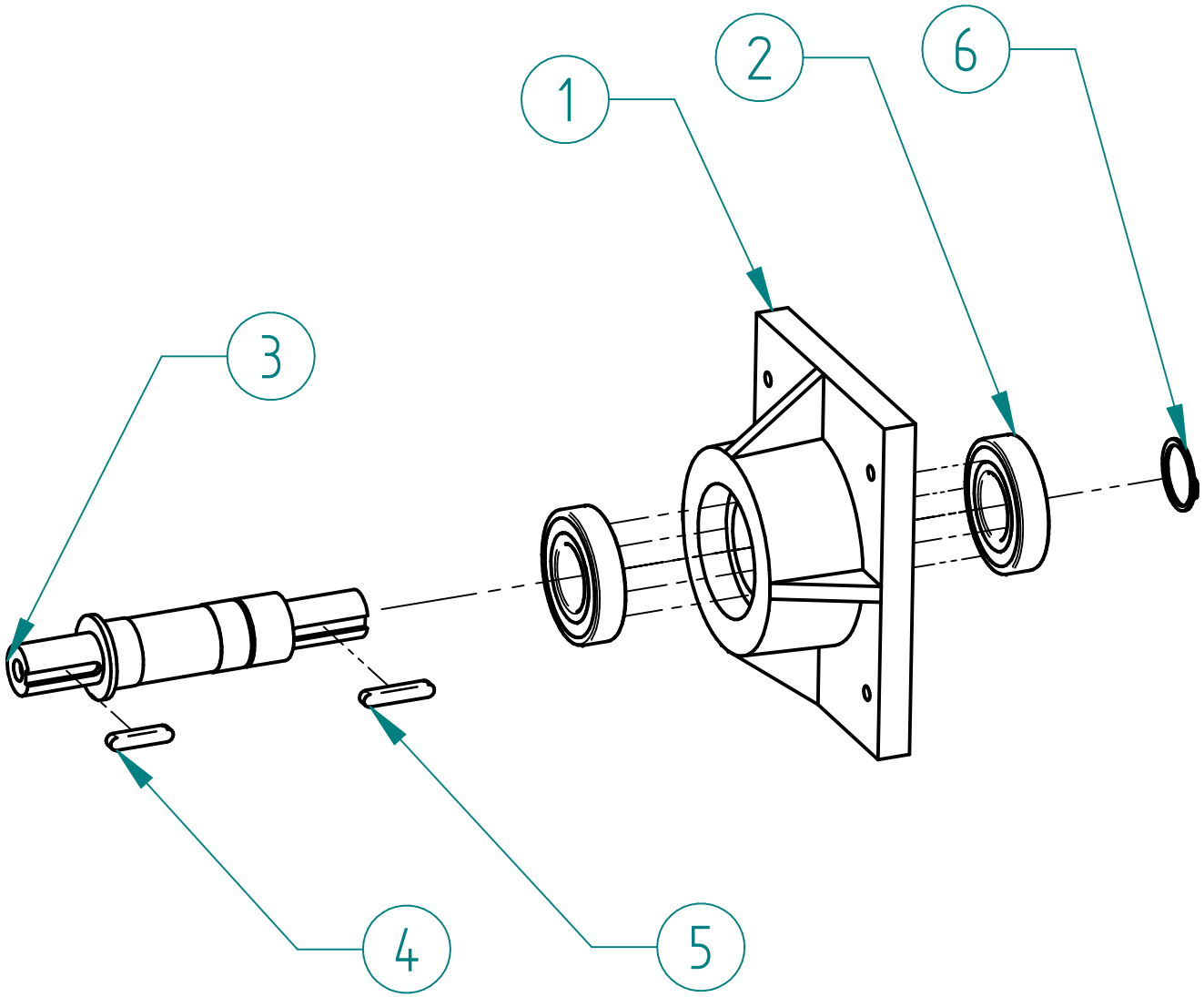

Item Number	File Name (no extension)	Quantity
	DKS – 00231 – DK 400 XL HS DRIVE WHEEL HOUSING AND SHAFT GROUP	
1	DKS – 00025 – DK 400 XL HS DRIVE WHEEL HOUSING	1
2	GSP – 00468 – 6208 2RS1 SKF DEEP GROVE BALL BEARING – DK400 BOTTOM PULLEY HOUSING BEARING	2
3	DKS – 00049 – DK 400 XL HS DRIVE WHEEL SHAFT	1
4	GSP – 00360 – 8x7x40 KEY	1
5	GSP – 00364 – 8x7x45 KEY	1
6	GSP – 00656 – SNAP RING 38X1_75	1

LOW SPEED DRIVING UNIT

Item	File Name (no extension)	Quantity
	DK 400 XL LS MOTOR GROUP ASSEMBLY	
1	DKS – 00241 – DK 400 XL LS DRIVE WHEEL HOUSING AND SHAFT ASSEMBLY	1
2	GSP – 00276 – M10 WASHER	8
3	GSP – 00167 – M10x30 HEXAGON BOLT	8

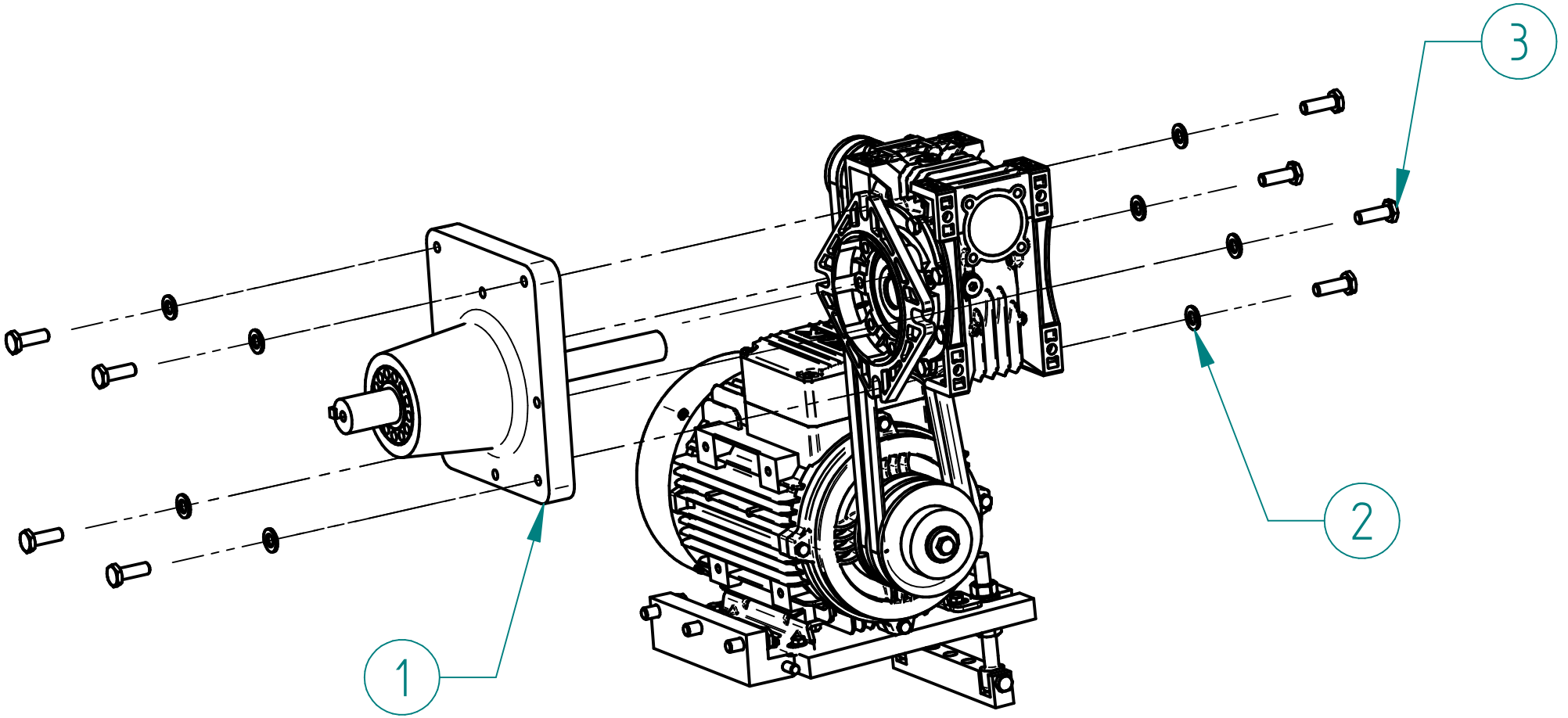

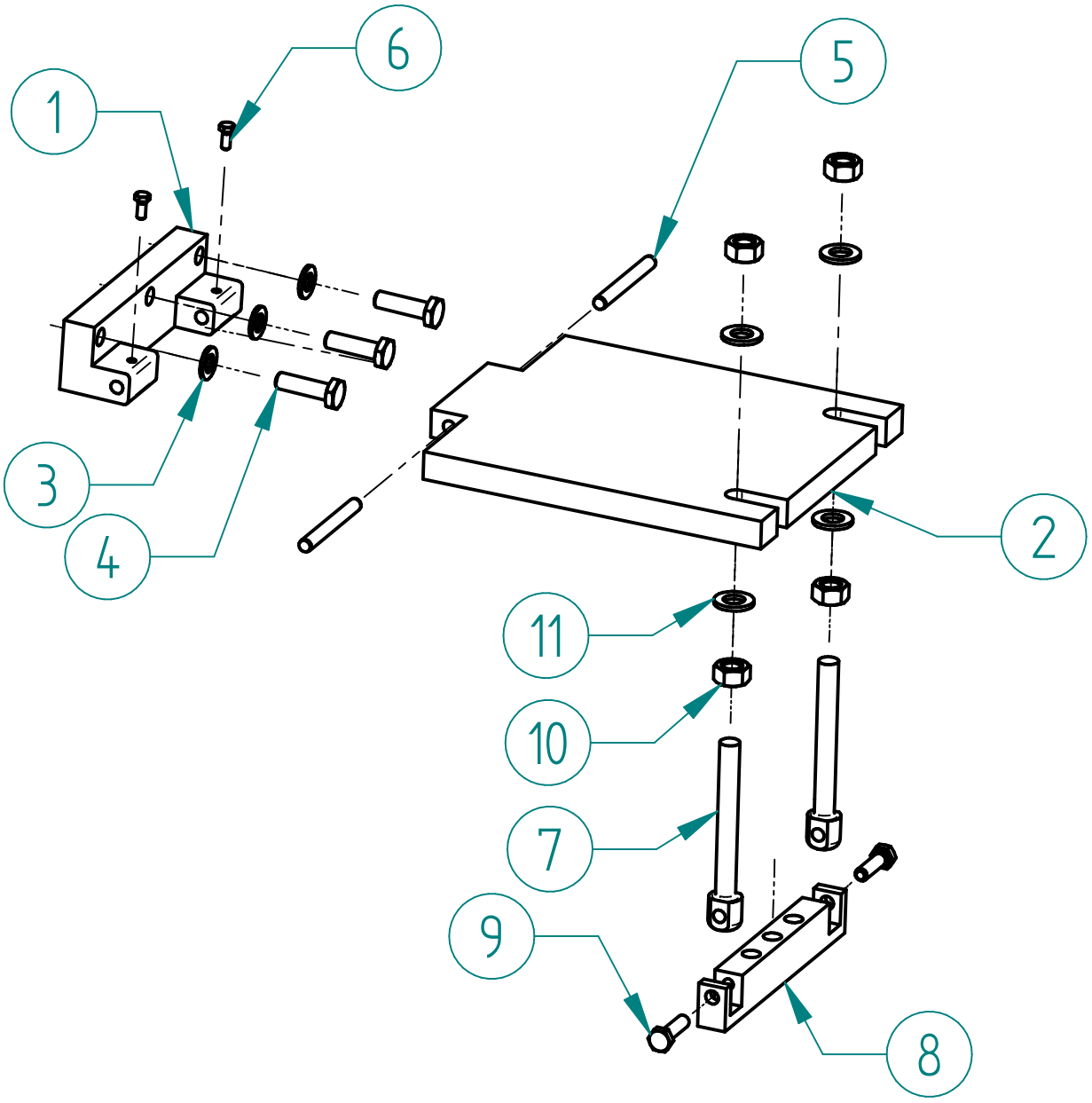

Item	File Name (no extension)	Quantity
	DK 400 XL LS MOTOR GROUP ASSEMBLY	
1	DKS – 00104 – DK 400 XL MOTOR MOUNTING PLATE ASSEMBLY LIM	1
2	DKS – 00103 – DK 400 XL MOTOR MOUNTING PLATE	1
3	GSP – 00276 – M10 WASHER	3
4	GSP – 00168 – M10x35 HEXAGON BOLT	3
5	DKS – 00643 – DK 400 XL MOTOR MOUNTING PLATE Q8x90 PIN	2
6	GSP – 00942 – M5x12 HEXAGON BOLT	2
7	DKS – 00620 – DK 400_600_900 MOTOR MOUNTING PLATE TENSION SHAFT	2
8	DKS – 00102 – DK 400_600_900 MOTOR MOUNTING PLATE TENSION LIM	1
9	GSP – 00141 – M8X30 HEXAGON BOLT	2
10	GSP – 00260 – M12 NUT	4
11	GSP – 00277 – M12 WASHER	4

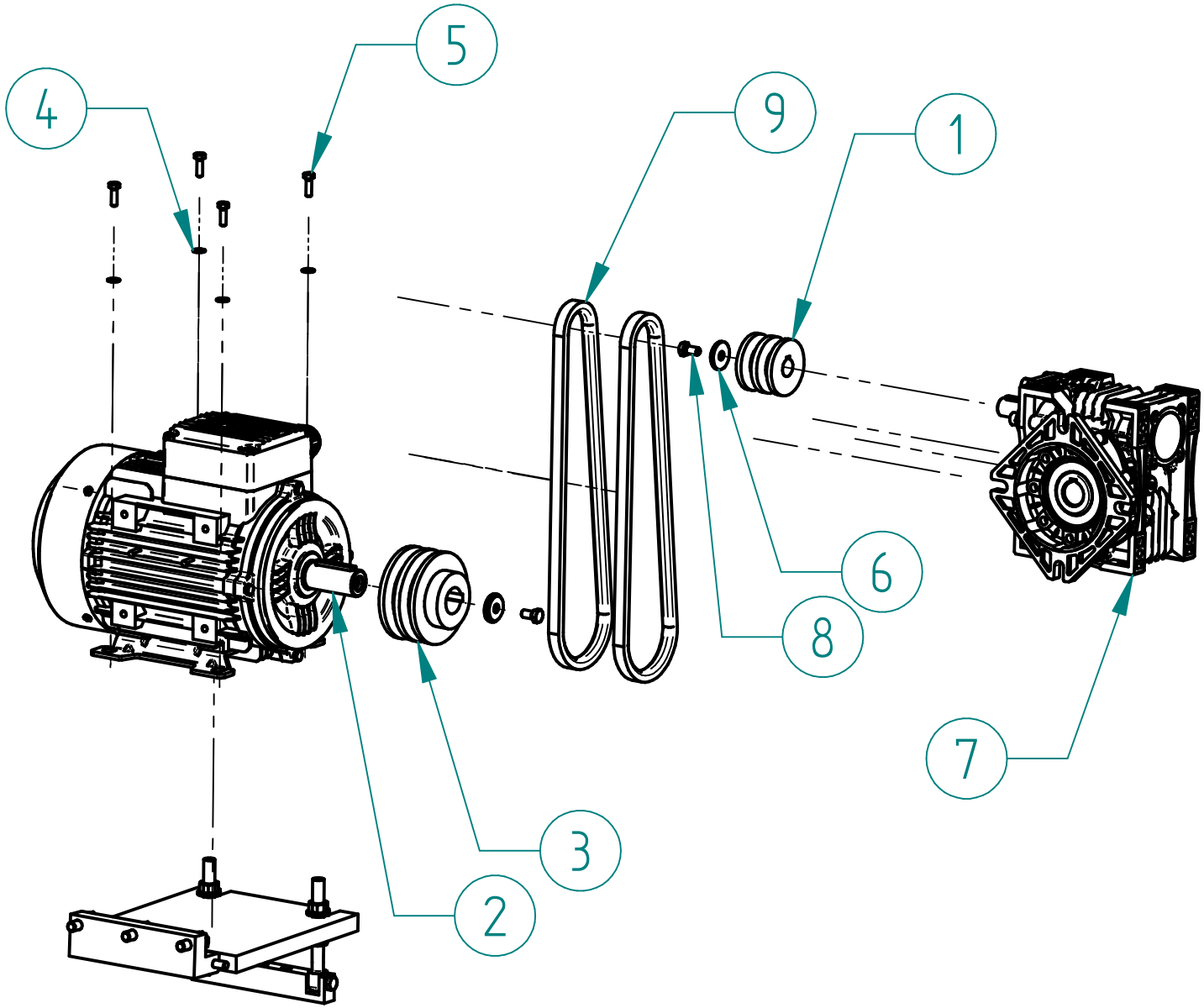

Item	File Name (no extension)	Quantity
	DK 400 XL LS MOTOR GROUP ASSEMBLY	
1	DKS – 00293 – Q60 DOUBLE V BELT PULLEY	1
2	GSP – 00636 – 3EL100L4_PD_K1-A 3KW ELK MOTOR	1
3	DKS – 00166 – Q100 DOUBLE V BELT PULLEY	1
4	GSP – 00274 – M6 WASHER	4
5	GSP – 00139 – M6x20 HEXAGON BOLT	4
6	DKS – 00133 – Q8_5-30-5 WASHER – DK 400 XL GEARBOX WASHER	2
7	DKS – 00026 – DK 400 XL GEARBOX – 7.25	1
8	GSP – 00140 – M8X16 HEXAGON BOLT	2
9	DKS – 00027 – DK 400 XL LS BELT	2

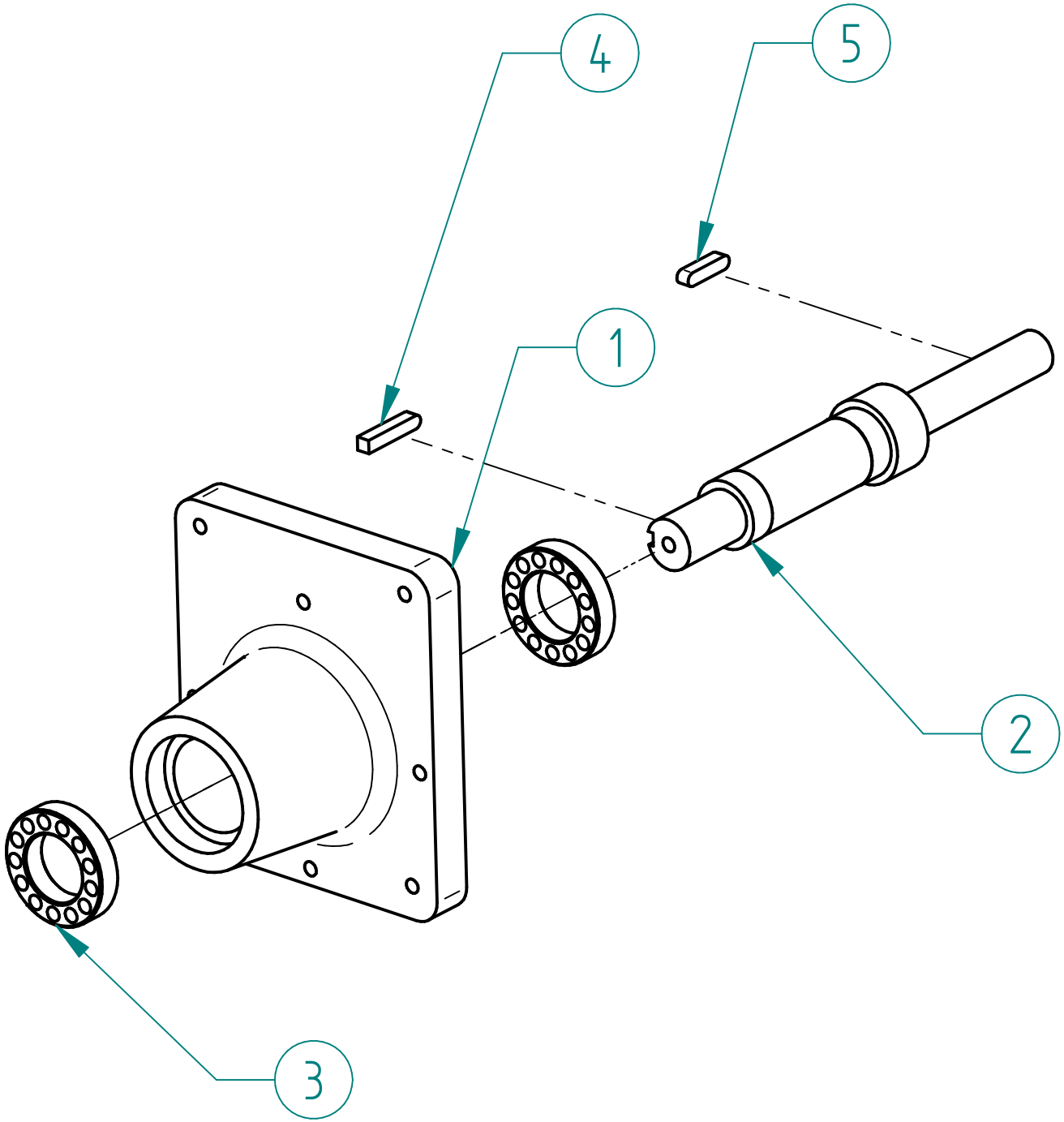

Item	File Name (no extension)	Quantity
	DKS – 00241 – DK 400 XL LS DRIVE WHEEL HOUSING AND SHAFT ASSEMBLY	
1	DKS – 00024 – DK 400 XL GB LS DRIVE WHEEL HOUSING	1
2	DKS – 00073 – DK 400 XL GB LS DRIVE WHEEL SHAFT	1
3	GSP – 00470 – 6008-2RS SKF DEEP GROOVE BALL BEARING – DK 400 XL LS LOWER WHEEL HOUSING BEARING	2
4	GSP – 00363 – 8x8x44 KEY	1
5	GSP – 00362 – 8x8x35 KEY	1

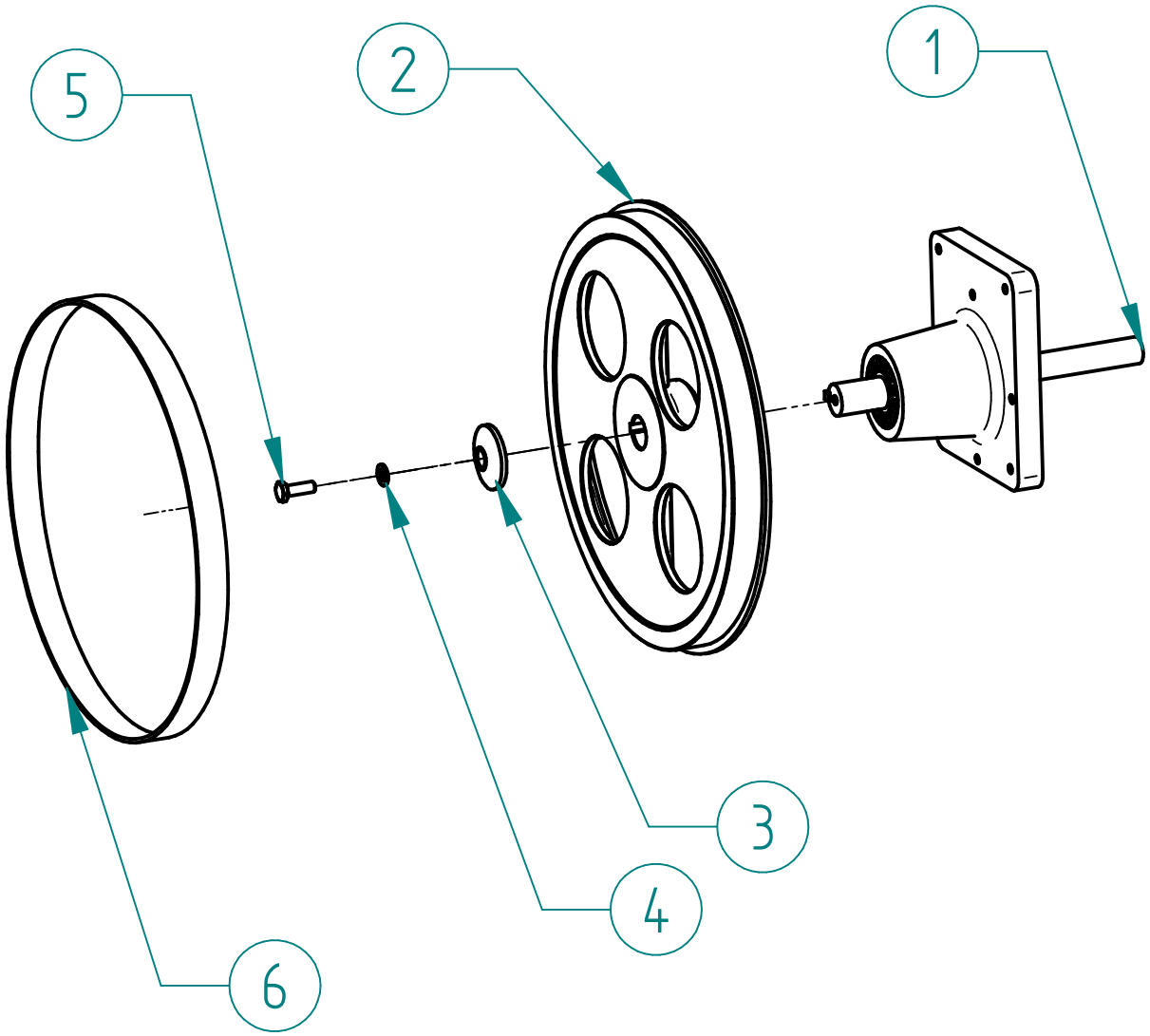

Item	File Name (no extension)	Quantity
	DK 400 XL LS DRIVE WHEEL FULL ASSEMBLY	
1	DKS - 00241 - DK 400 XL LS DRIVE WHEEL HOUSING AND SHAFT ASSEMBLY	1
2	DKS - 00095 - DK COUNTER DRIVE WHEEL	1
3	DKS - 00096 - Q10_5-60-12 WASHER	1
4	GSP - 00276 - M10 WASHER	1
5	GSP - 00167 - M10x30 HEXAGON BOLT	1
6	DKS - 00045 - BELT FOR 400mm WHEELS	1

TENSION UNIT GROUP

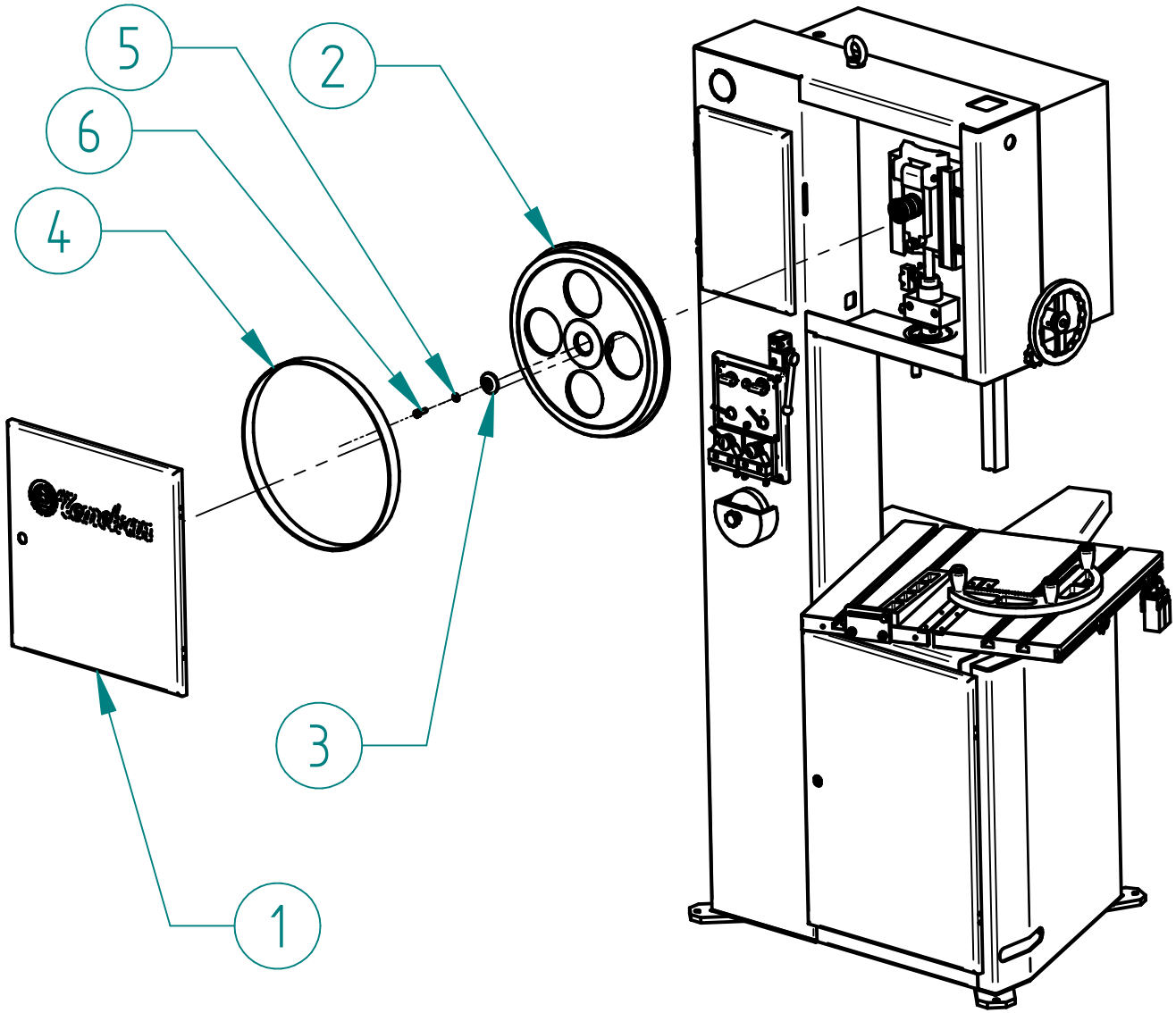

Item Number	File Name (no extension)	Quantity
	DK 400 XL HS	
1	DK400-BC-UPPER FRONT COVER	1
2	DKS - 00043 - DK 400_600 COUNTER TENSION WHEEL	1
3	DKS - 00097 - Q8_5-45-12 WASHER	1
4	DKS - 00045 - BELT FOR 400mm WHEELS	1
5	GSP - 00275 - M8 WASHER	1
6	GSP - 00155 - M8x25 HEXAGONAL BOLT	1

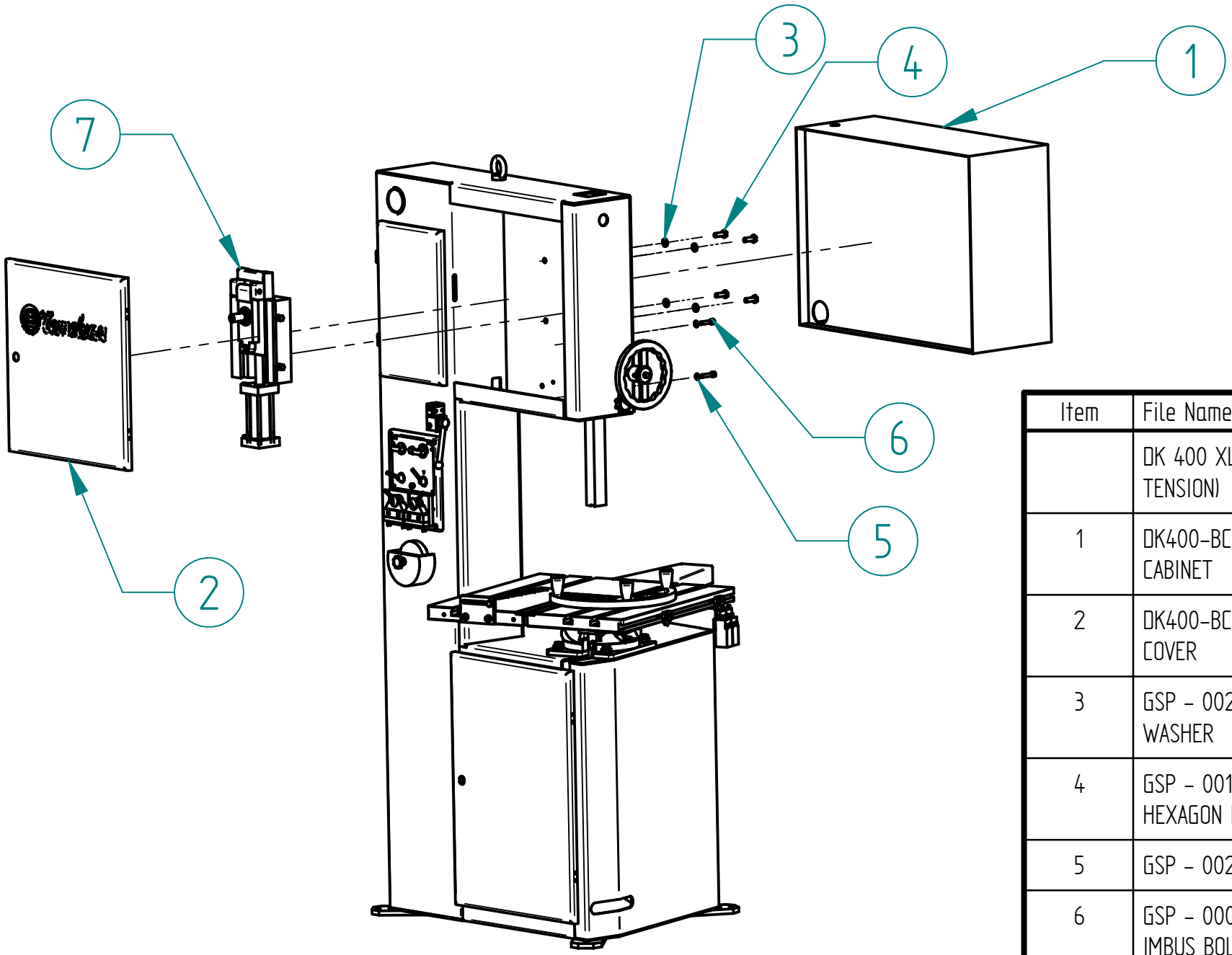

Item	File Name (no extension)	Quantity
	DK 400 XL (HYDRAULIC TENSION)	
1	DK400-BC-ELECTRIC CABINET	1
2	DK400-BC-UPPER FRONT COVER	1
3	GSP - 00276 - M10 WASHER	4
4	GSP - 00167 - M10x30 HEXAGON BOLT	4
5	GSP - 00275 - M8 WASHER	2
6	GSP - 00038 - M8x35 IMBUS BOLT	2
7	DKO - HBTU - 4 - HYDRAULIC BANDSAW TENSION UNIT	1

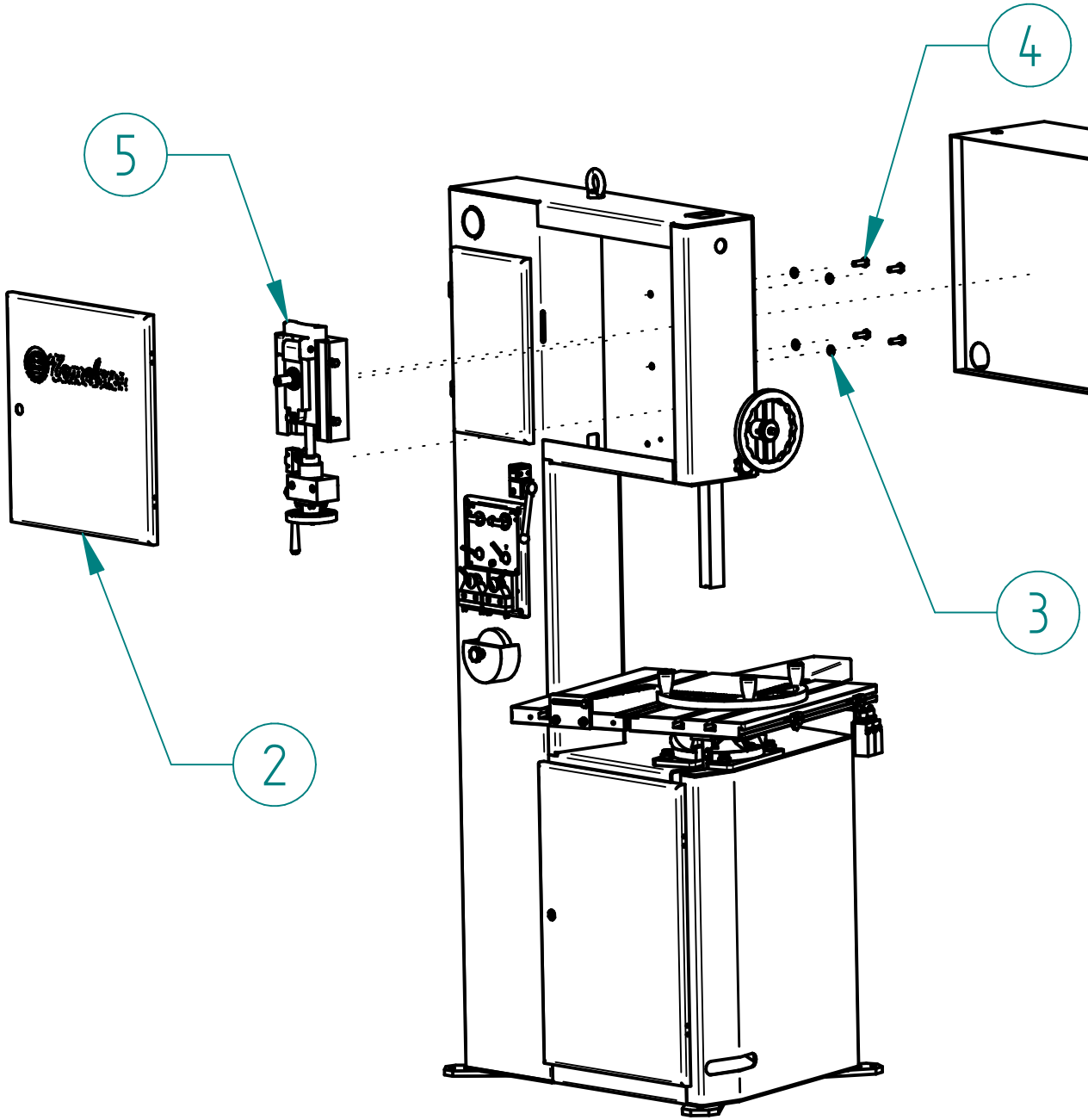

Item	File Name (no extension)	Quantity
1	DK400-BC-ELECTRIC CABINET	1
2	DK400-BC-UPPER FRONT COVER	1
3	GSP - 00276 - M10 WASHER	4
4	GSP - 00167 - M10x30 HEXAGON BOLT	4
5	DKS - 00277 - DK 400 XL MANUEL BANDSAW TENSION UNIT	1

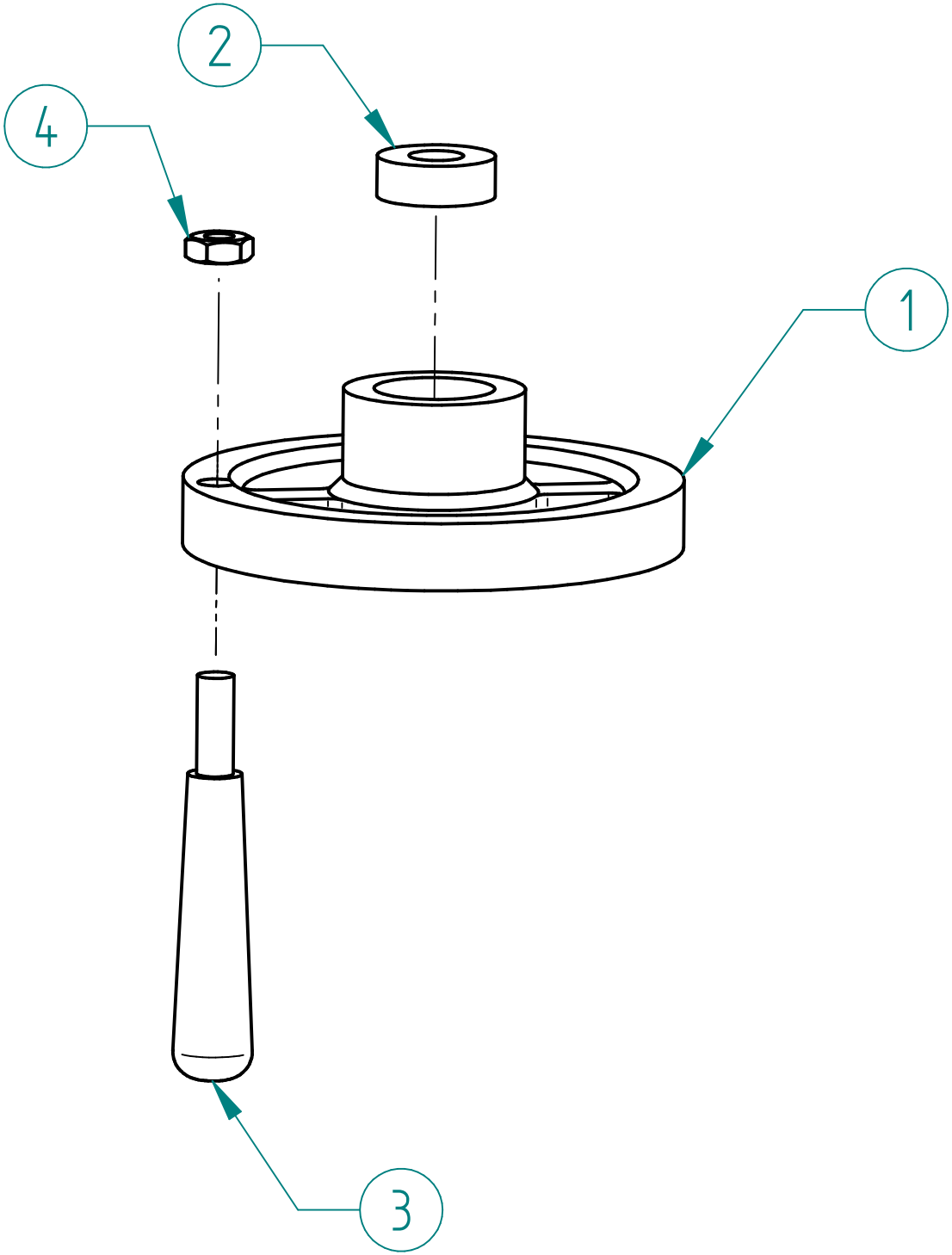

Item Number	File Name (no extension)	Quantity
	DKS – 00415 – DK COUNTER MANUEL TENSION HAND WHEEL GROUP	
1	DKS – 00035 – DK COUNTER TYPE BAND TENSION HAND WHEEL	1
2	GSP – 00469 – 51101 SKF THRUST BALL BEARING – DK 400 XL TENSIONER BEARING	1
3	GSP – 00983 – DK COUNTER TENSION HAND WHEEL M8 ROTATION HANDLE	1
4	GSP – 00258 – M8 NUT	1

MECHANIC TENSION UNIT

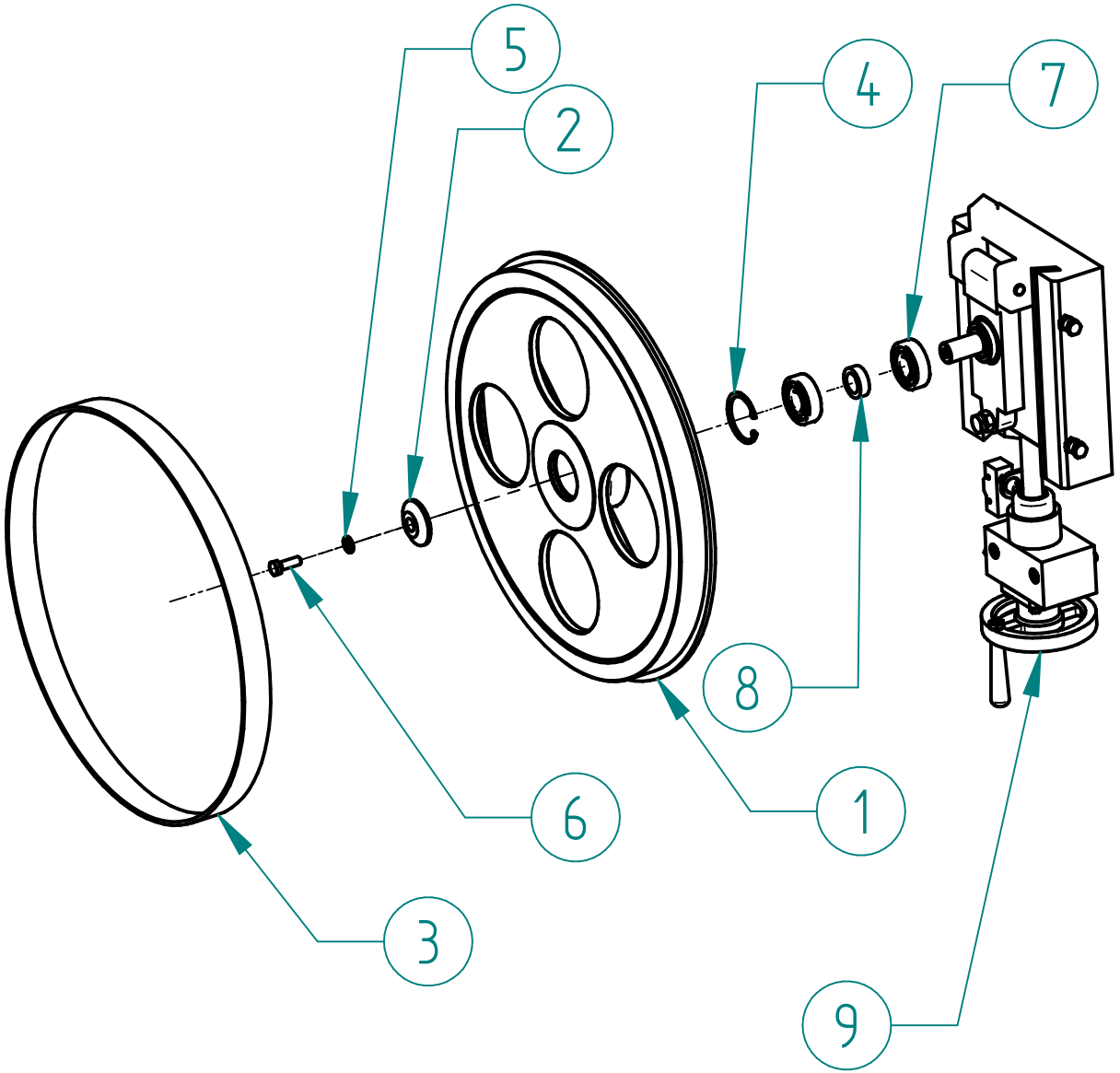

Item	File Name (no extension)	Quantity
	DK 400 XL TENSION WHEEL FULL ASSEMBLY	
1	DKS – 00043 – DK 400_600 COUNTER TENSION WHEEL	1
2	DKS – 00097 – Q8_5-45-12 WASHER	1
3	DKS – 00045 – BELT FOR 400mm WHEELS	1
4	GSP – 00611 – SNAP RING 48X1_75	1
5	GSP – 00275 – M8 WASHER	1
6	GSP – 00155 – M8x25 HEXAGONAL BOLT	1
7	GSP – 00476 – 6204 2Z-C3 SKF BEARING – DK COUNTER TENSION SHAFT BEARING	2
8	DKS – 00244 – DK COUNTER TENSION WHEEL SHAFT BEARING SPACER	1
9	DKS – 00277 – DK 400 XL MANUEL BANDSAW TENSION UNIT	1

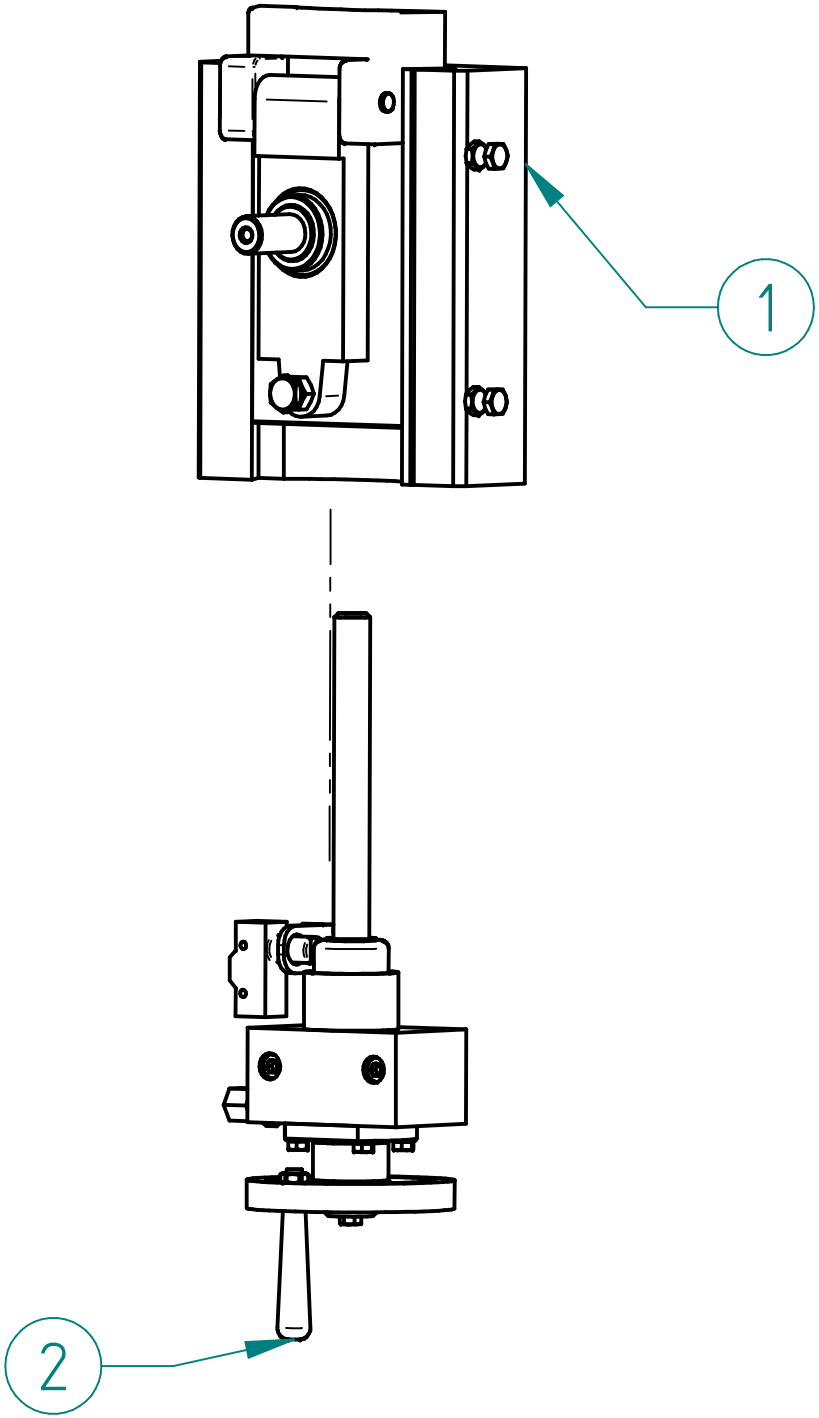

Item Number	File Name (no extension)	Quantity
	DKS – 00277 – DK 400 XL MANUEL BANDSAW TENSION UNIT	
1	DKS – 00296 – DK 400 XL TENSION UNIT MECHANICAL SYSTEM	1
2	DKS – 00347 – DK 400 XL TENSION UNIT MANUAL HYDRAULIC SYSTEM	1

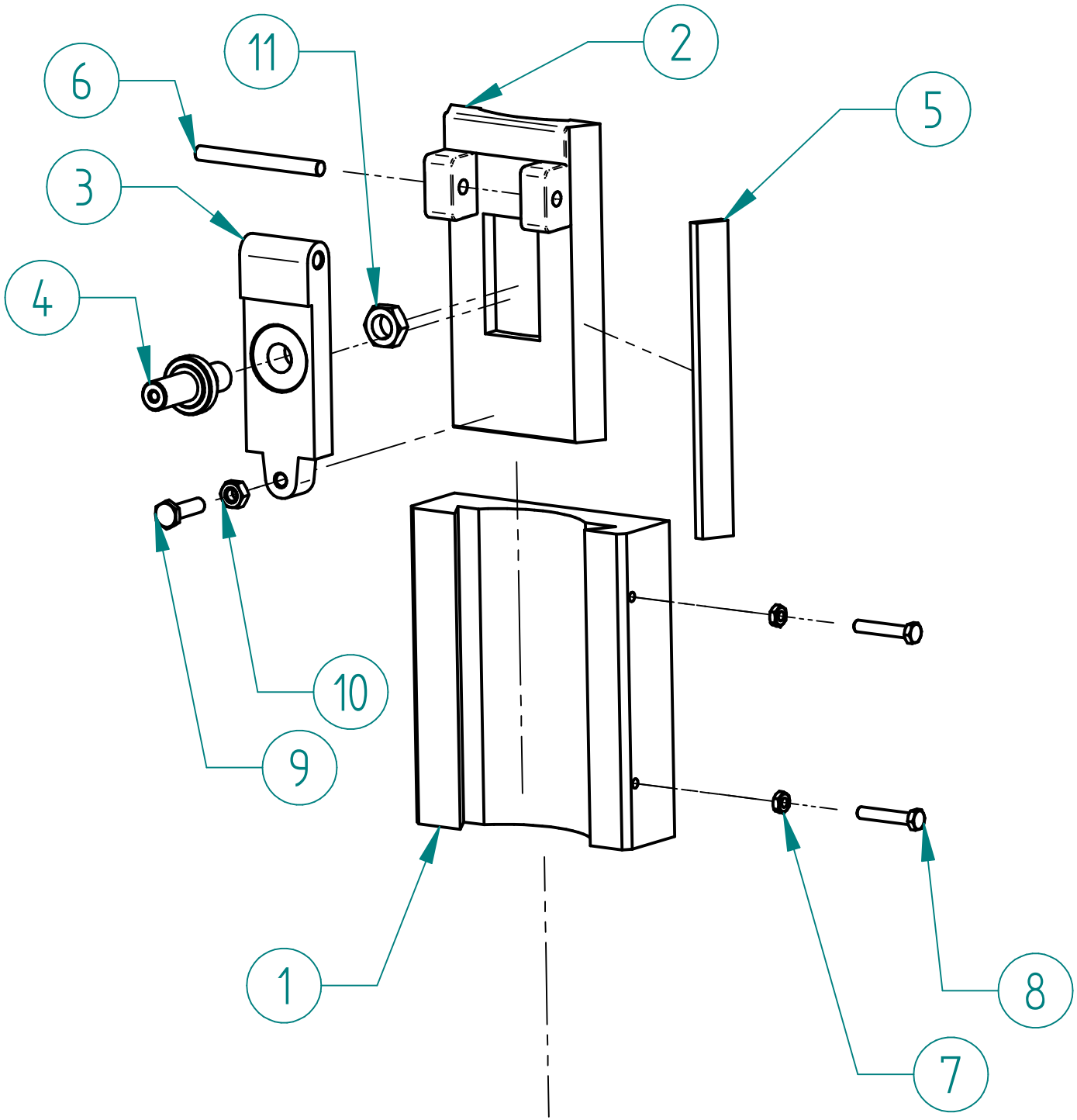

Item Number	File Name (no extension)	Quantity
	DKS – 00296 – DK 400 XL TENSION UNIT MECHANICAL SYSTEM	
1	DKS – 00108 – DK COUNTER TENSION MECHANIC SLIDING BASE	1
2	DKS – 00110 – DK COUNTER TENSION SLIDING PART	1
3	DKS – 00109 – DK COUNTER TENSION WHEEL ANGULATION LIM	1
4	DKS – 00053 – DK 400 XL TENSION WHEEL SHAFT	1
5	DKS – 00111 – DK COUNTER TENSION SLIDING PART TIGHTENING LIM	1
6	DKS – 00112 – DK COUNTER TENSION PIVOT PIN	1
7	GSP – 00258 – M8 NUT	2
8	GSP – 00144 – M8x45 HEXAGON BOLT	2
9	GSP – 00168 – M10x35 HEXAGON BOLT	1
10	GSP – 00259 – M10 NUT	1
11	GSP – 00659 – M20 NUT	1

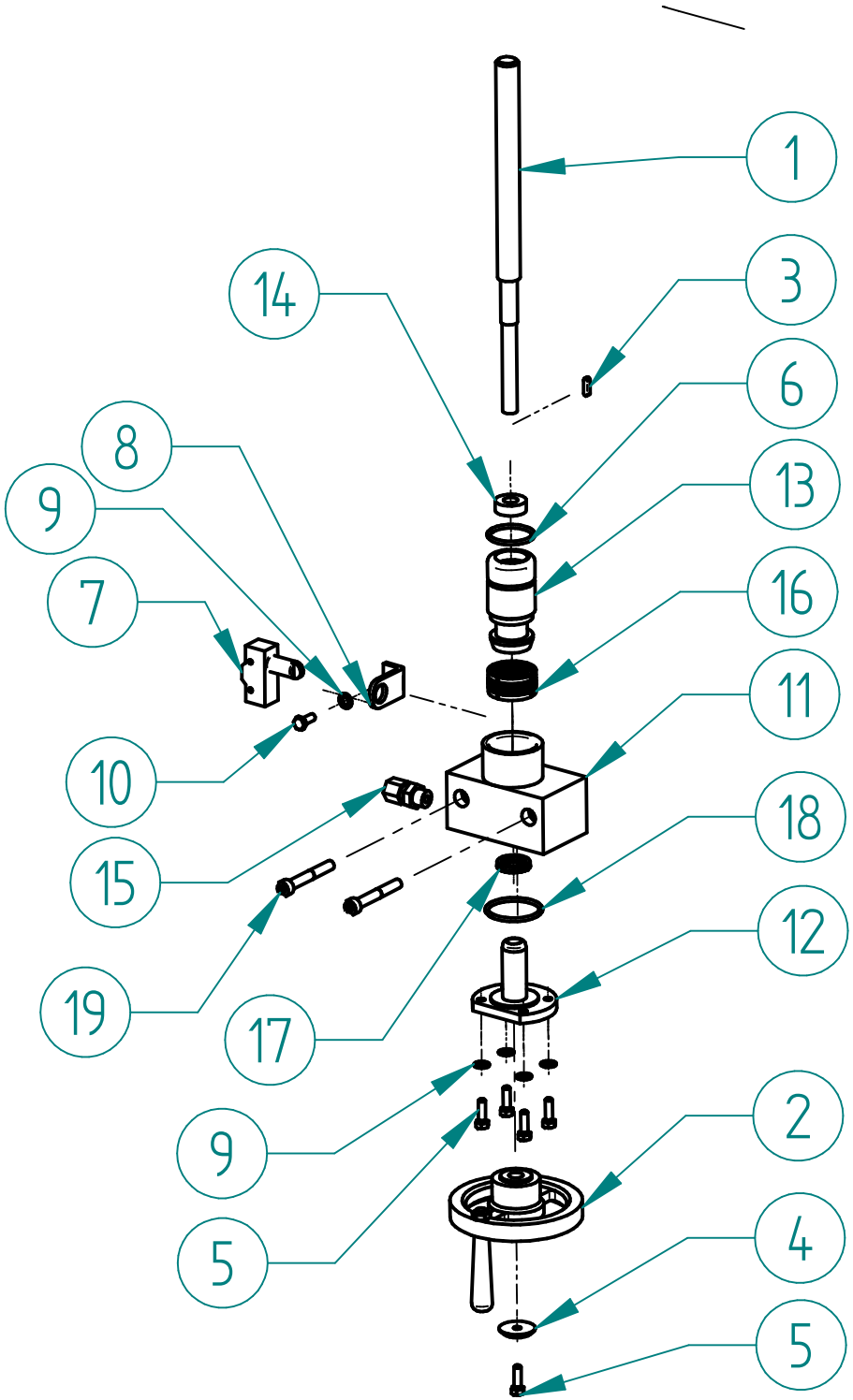

Item	File Name (no extension)	Quantity
	DKS – 00347 – DK 400 XL TENSION UNIT MANUAL HYDRAULIC SYSTEM	
1	DKS – 00107 – DK 400 XL TENSION PISTON SHAFT	1
2	DKS – 00415 – DK COUNTER MANUEL TENSION HAND WHEEL GROUP	1
3	GSP – 00361 – 4x4x16 KEY	1
4	KNS – 00368 – M6-30-5 WASHER	1
5	GSP – 00139 – M6x20 HEXAGON BOLT	5
6	GSP – 00555 – O-RING 32X3	1
7	GSP – 00639 – EMAS MN2MUM3 – SWITCH – DK COUNTER TENSION SWITCH	1
8	DKS – 00106 – DK COUNTER TENSION MN2MUM3 SWITCH ASSEMBLY LIM	1
9	GSP – 00274 – M6 WASHER	5
10	GSP – 00138 – M6x16 HEXAGON BOLT	1
11	DKS – 00099 – DK COUNTER TENSION PISTON MAIN BODY	1
12	DKS – 00100 – DK COUNTER TENSION PISTON SHAFT FLANGE	1
13	DKS – 00101 – DK COUNTER TENSION PISTON BODY MAIN SHAFT CYLINDER	1
14	GSP – 00469 – 51101 SKF THRUST BALL BEARING – DK 400 XL TENSIONER BEARING	1
15	HSP – 00015 – FITTING DRS 3_8-10	1
16	GSP – 00509 – KASTAS-K18-40X26X15_5X36X2_6 – TEMELSAN PISTON	1
17	GSP – 00517 – KASTAS-K21-20X28X5 – DK 400 XL TENSIONER	1
18	GSP – 00554 – O-RING 45X3	1
19	GSP – 00039 – M8X60 IMBUS BOLT	2

HYDRAULIC TENSION UNIT

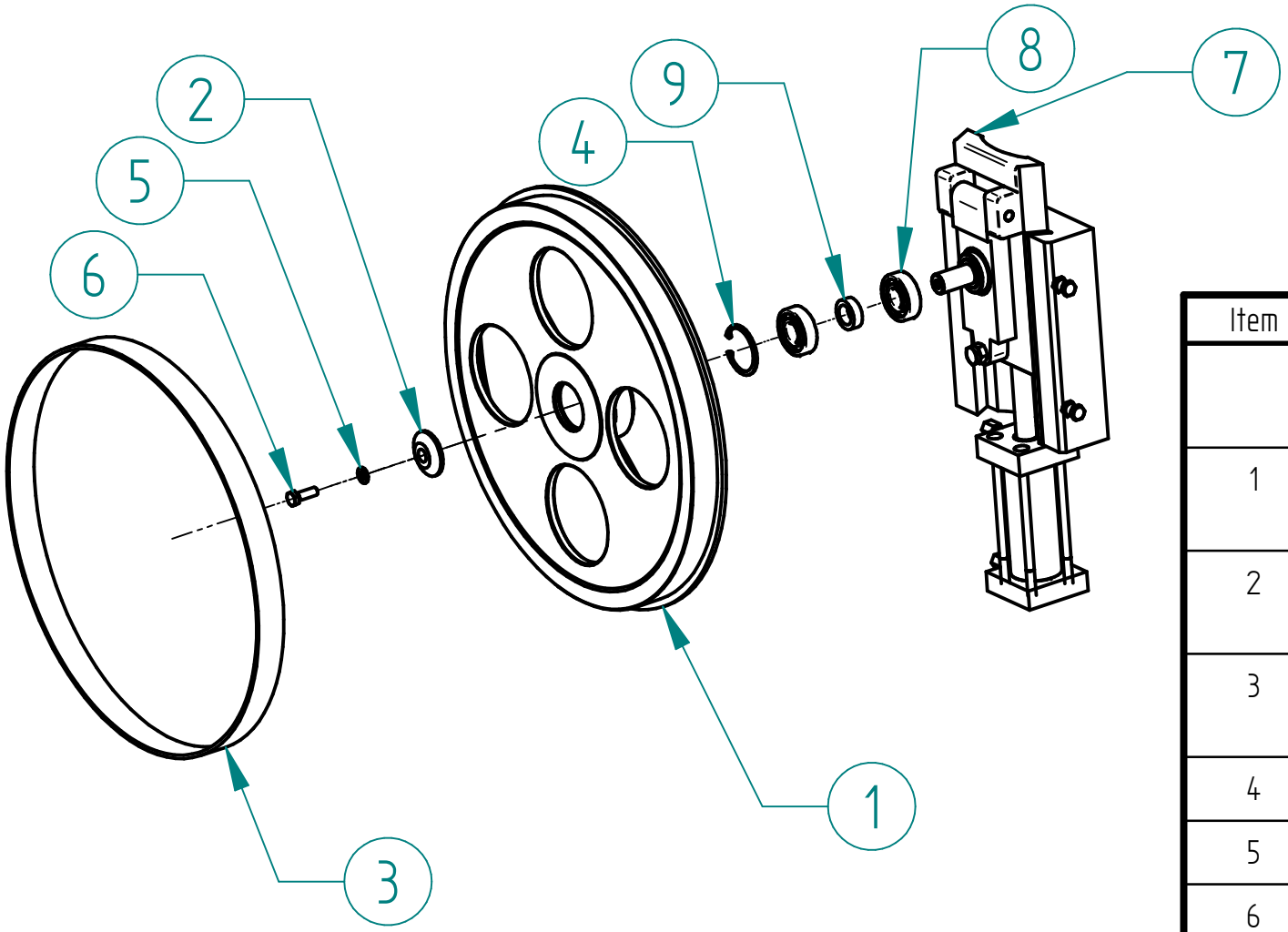

Item	File Name (no extension)	Quantity
	DK 400 XL UPPER WHEEL HYDRAULIC TENSION FULL ASSEMBLY	
1	DKS – 00043 – DK 400_600 COUNTER TENSION WHEEL	1
2	DKS – 00097 – Q8_5-45-12 WASHER	1
3	DKS – 00045 – BELT FOR 400mm WHEELS	1
4	GSP – 00611 – SNAP RING 48X1_75	1
5	GSP – 00275 – M8 WASHER	1
6	GSP – 00155 – M8x25 HEXAGONAL BOLT	1
7	DKO – HBTU – 4 – HYDRAULIC BANDSAW TENSION UNIT	1
8	GSP – 00476 – 6204 2Z-C3 SKF BEARING – DK COUNTER TENSION SHAFT BEARING	2
9	DKS – 00244 – DK COUNTER TENSION WHEEL SHAFT BEARING SPACER	1

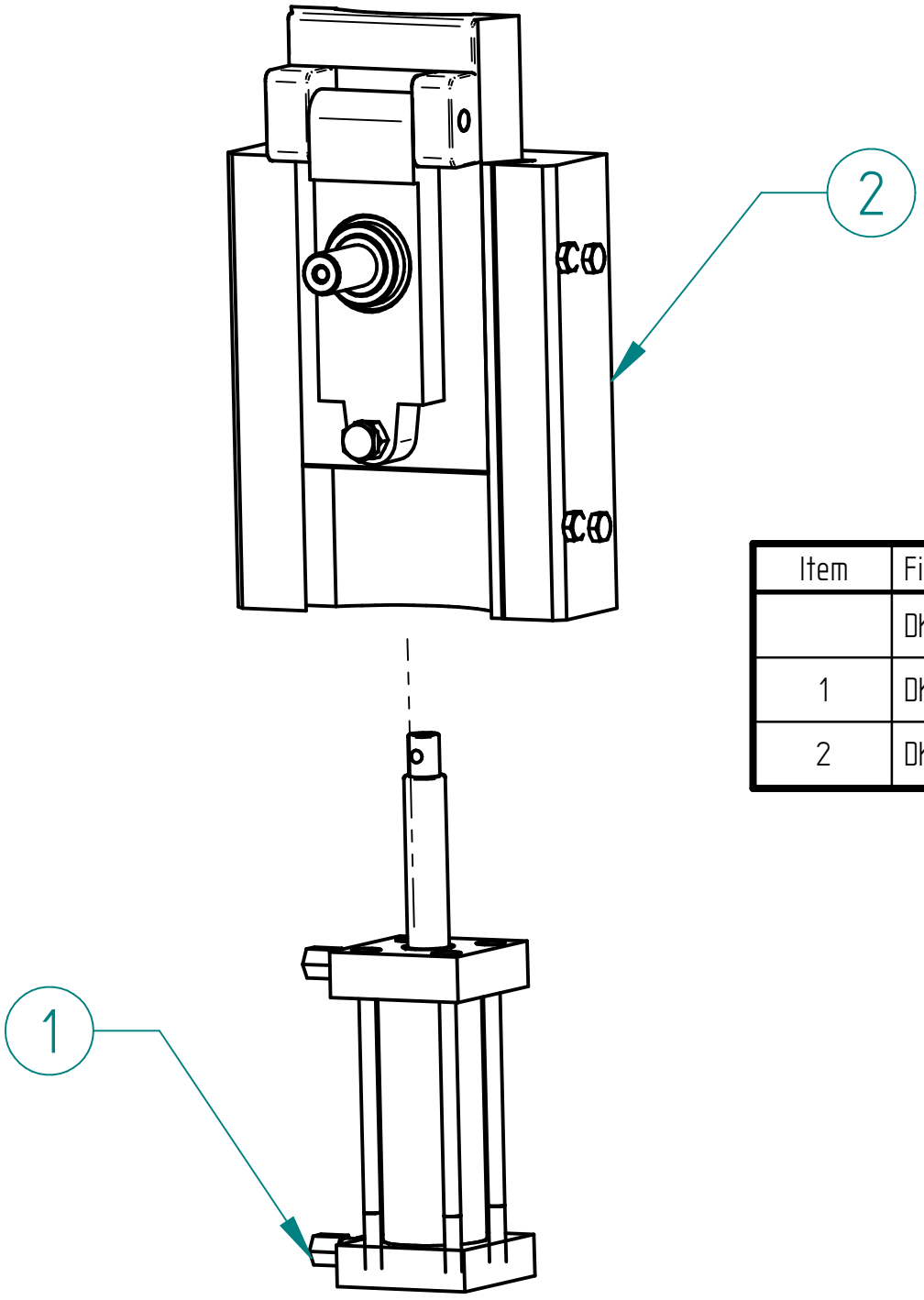

Item	File Name (no extension)	Quantity
	DKO – HBTU – 4 – HYDRAULIC BANDSAW TENSION UNIT	
1	DKS – 00557 – DK 400 XL HYDRAULIC TENSION PISTON	1
2	DKS – 00558 – DK 400 XL HYDRAULIC TENSION UNIT MECHANICAL SYSTEM	1

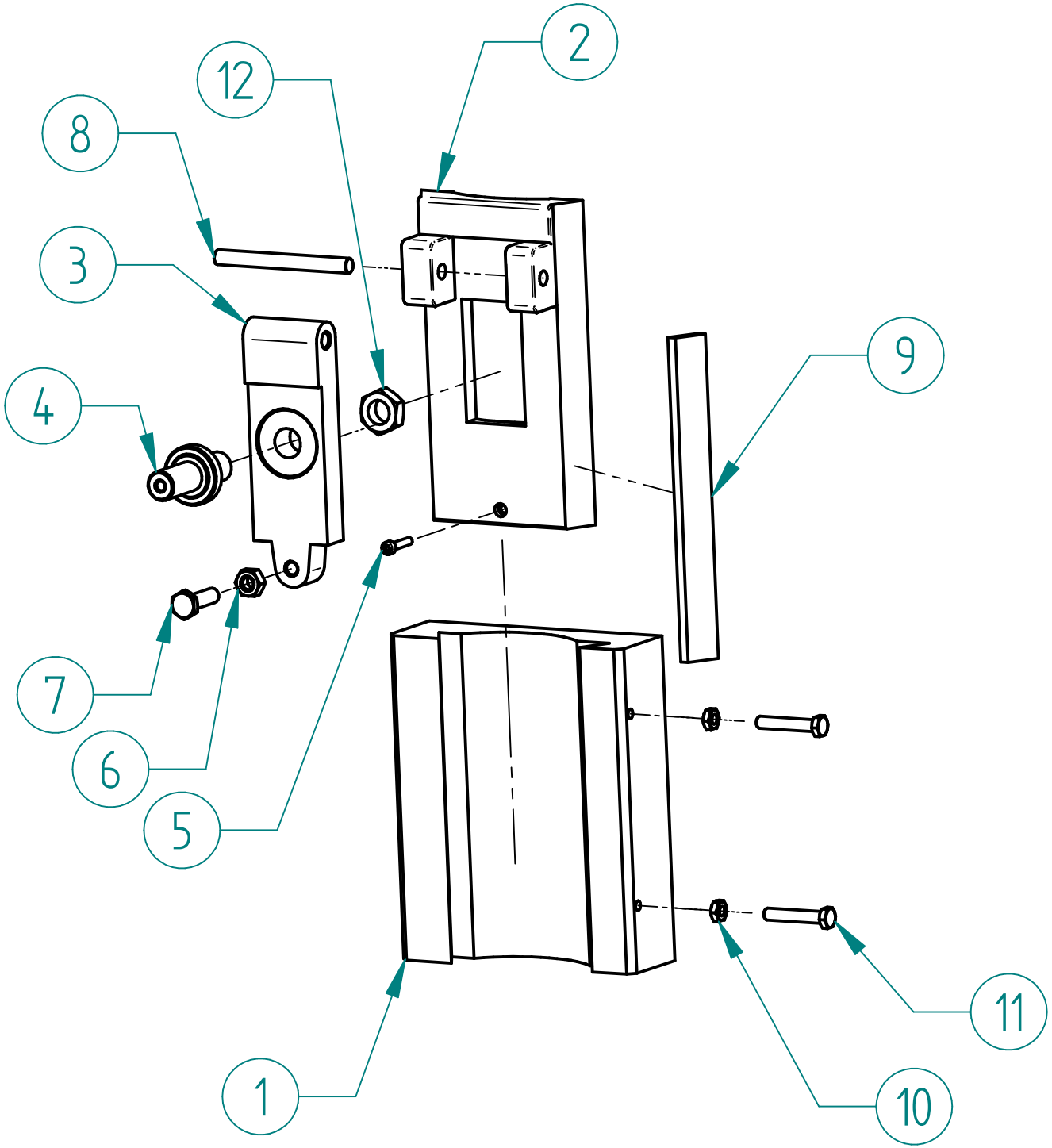

Item	File Name (no extension)	Quantity
	DKS – 00558 – DK 400 XL HYDRAULIC TENSION UNIT MECHANICAL SYSTEM	
1	DKS – 00108 – DK COUNTER TENSION MECHANIC SLIDING BASE	1
2	DKS – 00552 – DK COUNTER HYDRAULIC TENSION SLIDING PART	1
3	DKS – 00109 – DK COUNTER TENSION WHEEL ANGULATION LIM	1
4	DKS – 00053 – DK 400 XL TENSION WHEEL SHAFT	1
5	GSP – 00016 – M5X25 IMBUS BOLT	1
6	GSP – 00259 – M10 NUT	1
7	GSP – 00168 – M10x35 HEXAGON BOLT	1
8	DKS – 00112 – DK COUNTER TENSION PIVOT PIN	1
9	DKS – 00111 – DK COUNTER TENSION SLIDING PART TIGHTENING LIM	1
10	GSP – 00258 – M8 NUT	2
11	GSP – 00144 – M8x45 HEXAGON BOLT	2
12	GSP – 00659 – M20 NUT	1

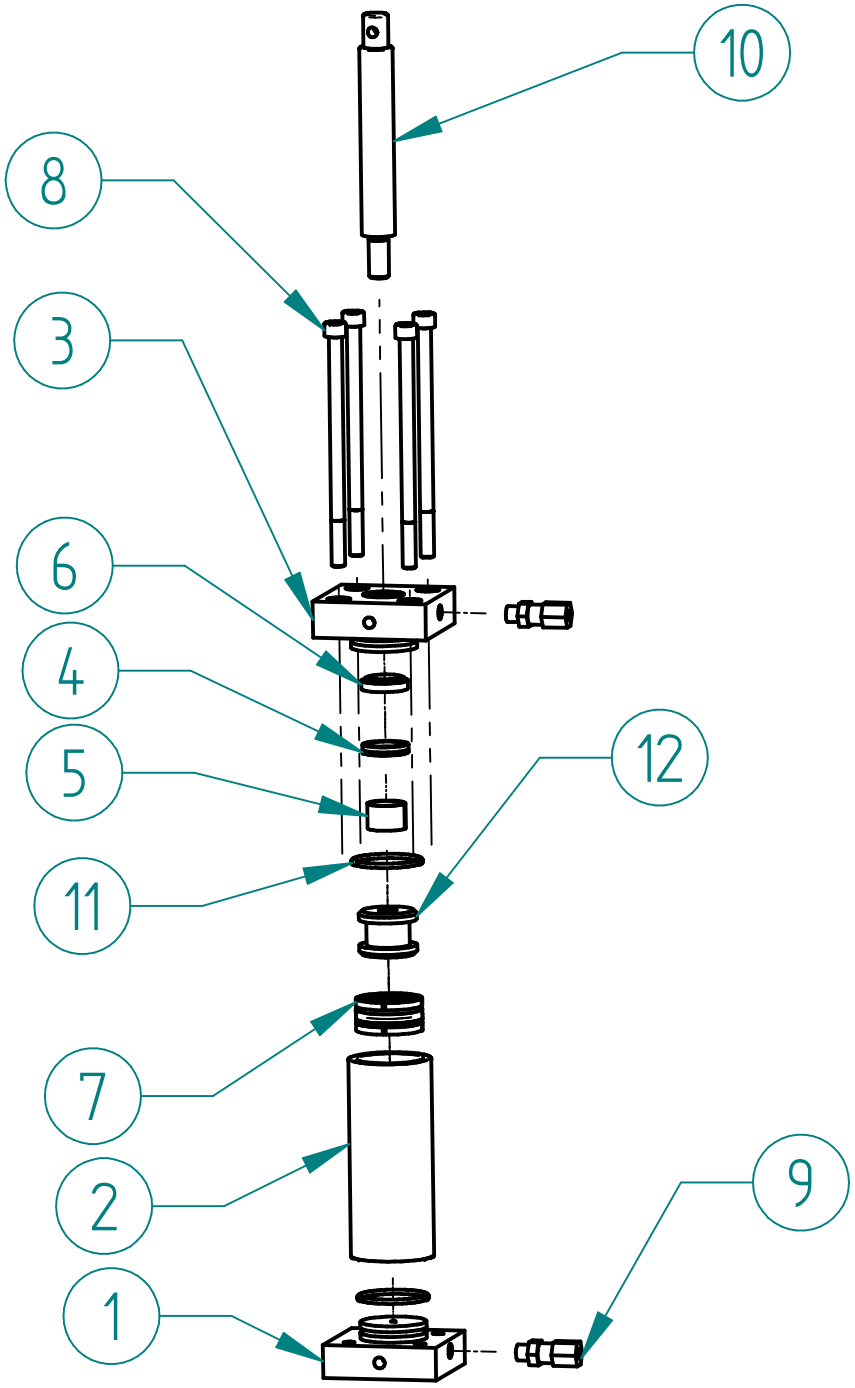

Item	File Name (no extension)	Quantity
	DKS – 00557 – DK 400 XL HYDRAULIC TENSION PISTON	
1	DKS – 00555 – DK COUNTER HYDRAULIC TENSION PISTON BOTTOM COVER	1
2	DKS – 00556 – DK 400 XL HYDRAULIC TENSION PISTON PIPE	1
3	DKS – 00554 – DK COUNTER HYDRAULIC TENSION PISTON TOP COVER	1
4	GSP – 00517 – KASTAS-K21-20X27X6 – DK 400 XL TENSIONER	1
5	GSP – 00386 – PAP 2015 BUSH	1
6	GSP – 00526 – 20x28x7_25 – HYDRAULIC DUST SEAL	1
7	GSP – 00509 – KASTAS-K18-40X26X15_5X36X2_6 – TEMELSAN PISTON	1
8	GSP – 00711 – M8x140 IMBUS BOLT	4
9	HSP – 00031 – FITTING DRS 1_8-6	2
10	DKS – 00553 – DK 400 XL HYDRAULIC TENSION PISTON SHAFT	1
11	GSP – 00559 – O-RING 38X3	2
12	DKS – 00563 – DK COUNTER HYDRAULIC TENSION PISTON SEAL GUIDE RING	1

POST ELEVATION UNIT

MANUEL
POST ELEVATION
UNIT

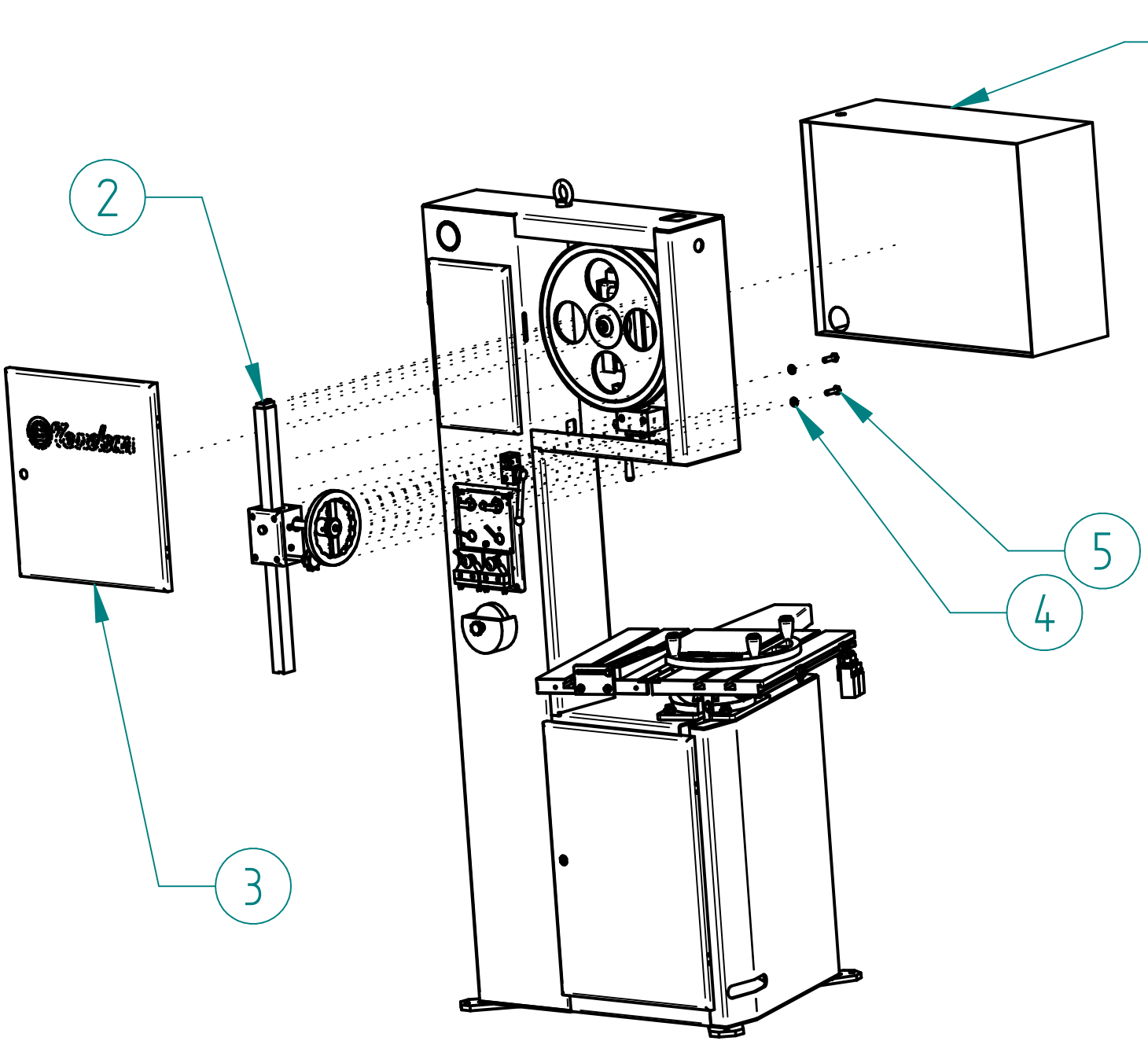

Item	File Name (no extension)	Quantity
1	DK400-BC-ELECTRIC CABINET	1
2	DKS - 00090 - DK 400 POST ELEVATION GROUP	1
3	DK400-BC-UPPER FRONT COVER	1
4	GSP - 00276 - M10 WASHER	6
5	GSP - 00168 - M10x35 HEXAGON BOLT	2

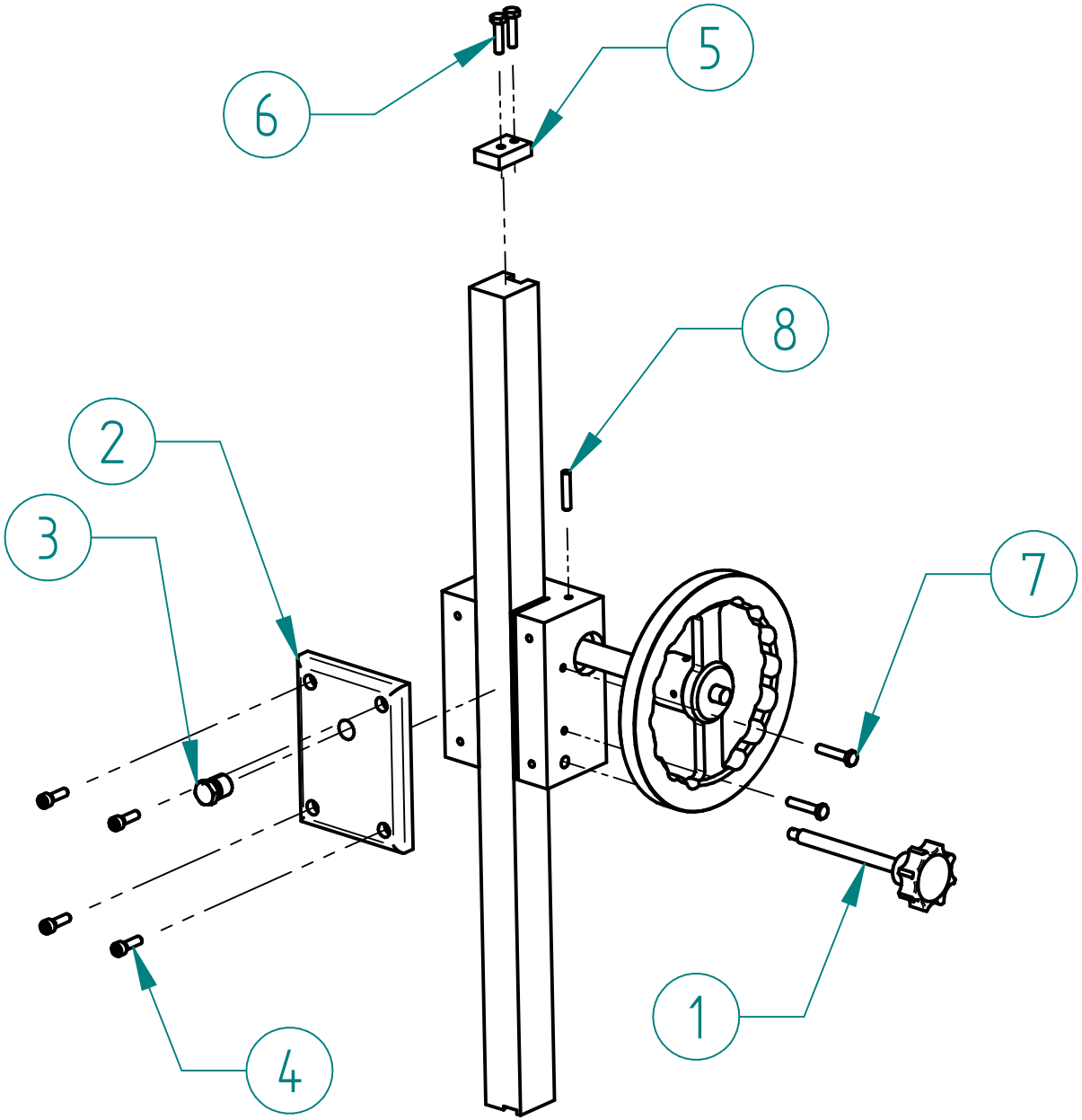

Item	File Name (no extension)	Quantity
	DKS – 00090 – DK 400 POST ELEVATION GROUP	
1*	GSP – 00853 – M10x110 MALE STAR KNOB	1
2	DKS – 00126 – DK 400 XL POST ELEVATION HOUSING COVER	1
3	DKS – 00132 – DK 400 XL POST ELEVATION HOUSING COVER FIXTURE	1
4	GSP – 00023 – M6x20 IMBUS BOLT	4
5	DKS – 00238 – DK 400_600_900 POST ELEVATION RACK CHAIN MOUNTING LIM	1
6	GSP – 00125 – M6X25 HEXAGON BOLT	2
7	GSP – 00136 – M6x30 HEXAGON BOLT	2
8	GSP – 00303 – M6x30 SETSCREW	1

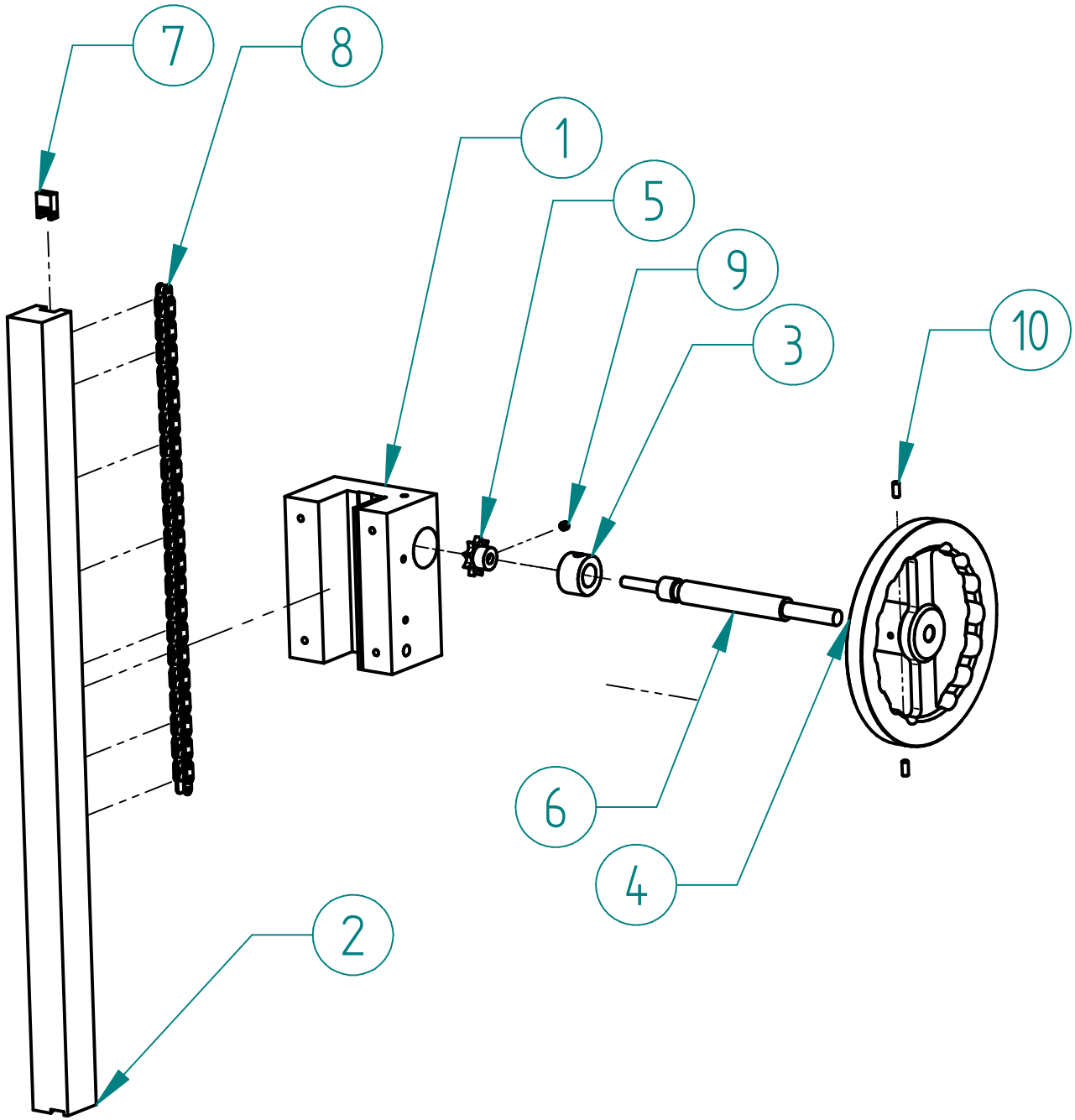

Item	File Name (no extension)	Quantity
	DKS – 00090 – DK 400 POST ELEVATION GROUP	
1	DKS – 00127 – DK 400 XL POST ELEVATION HOUSING	1
2	DKS – 00125 – DK 400 XL POST ELEVATION RACK	1
3	DKS – 00130 – DK 400_600_900 POST ELEVATION PINION SHAFT BUSHING	1
4	DKS – 00076 – DK 400_600_900 POST ELEVATING HANDLE	1
5	DKS – 00128 – DK 400_600_900 POST ELEVATION PINION	1
6	DKS – 00129 – DK 400_600_900 POST ELEVATION PINION SHAFT	1
7	DKS – 00237 – DK 400_600_900 POST ELEVATION RACK CHAIN TENSION PART	1
8	DKS – 00236 – DK 400 XL POST ELEVATION RACK CHAIN	1
9	GSP – 00308 – M6x6 SETSCREW	1
10	GSP – 00294 – M5X12 SETSCREW	2

MOTORIZED
POST ELEVATION
UNIT

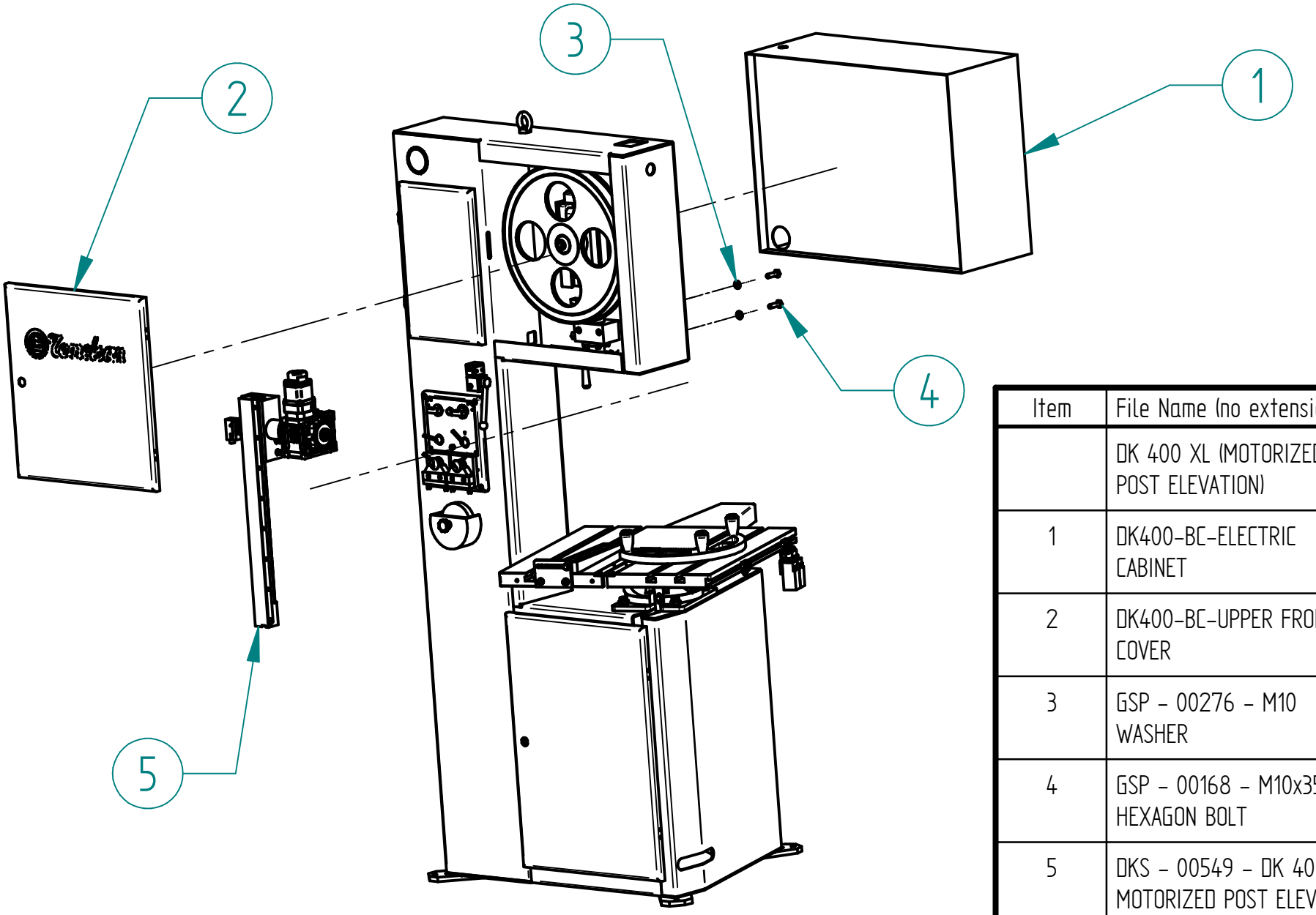

Item	File Name (no extension)	Quantity
	DK 400 XL (MOTORIZED POST ELEVATION)	
1	DK400-BC-ELECTRIC CABINET	1
2	DK400-BC-UPPER FRONT COVER	1
3	GSP - 00276 - M10 WASHER	2
4	GSP - 00168 - M10x35 HEXAGON BOLT	2
5	DKS - 00549 - DK 400 XL MOTORIZED POST ELEVATION UNIT	1

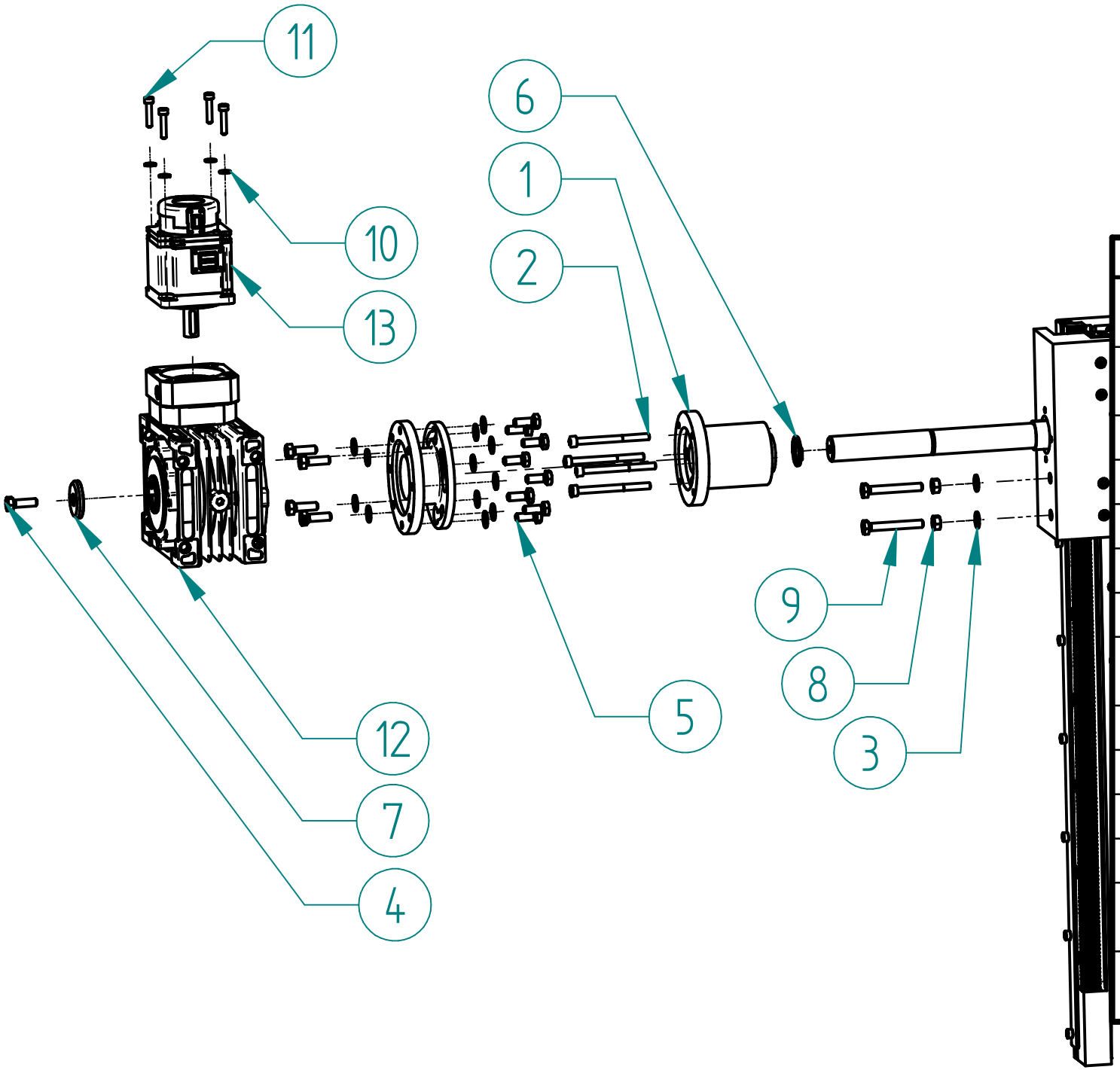

Item	File Name (no extension)	Quantity
	DKS - 00549 - DK 400 XL MOTORIZED POST ELEVATION UNIT	
1	DKS - 00537 - DK 400_600_900 MOTORIZED POST ELEVATION FLANGE	1
2	GSP - 00020 - M5x60 IMBUS BOLT	4
3	GSP - 00274 - M6 WASHER	18
4	GSP - 00139 - M6x20 HEXAGON BOLT	5
5	GSP - 00138 - M6x16 HEXAGON BOLT	8
6	GSP - 00616 - SNAP RING 20X1_75	1
7	DKS - 00133 - Q8_5-30-5 WASHER - DK 400 XL GEARBOX WASHER	1
8	GSP - 00257 - M6 NUT	6
9	GSP - 00128 - M6x45 HEXAGON BOLT	2
10	GSP - 00272 - M4 WASHER	4
11	GSP - 00008 - M4x20 IMBUS BOLT	4
12	GSP - 00707 - WE040R-50 HOLLOW OUTPUT SHAFT GEARBOX	1
13	GSP - 00597 - 200W SERVO MOTOR OMRON	1

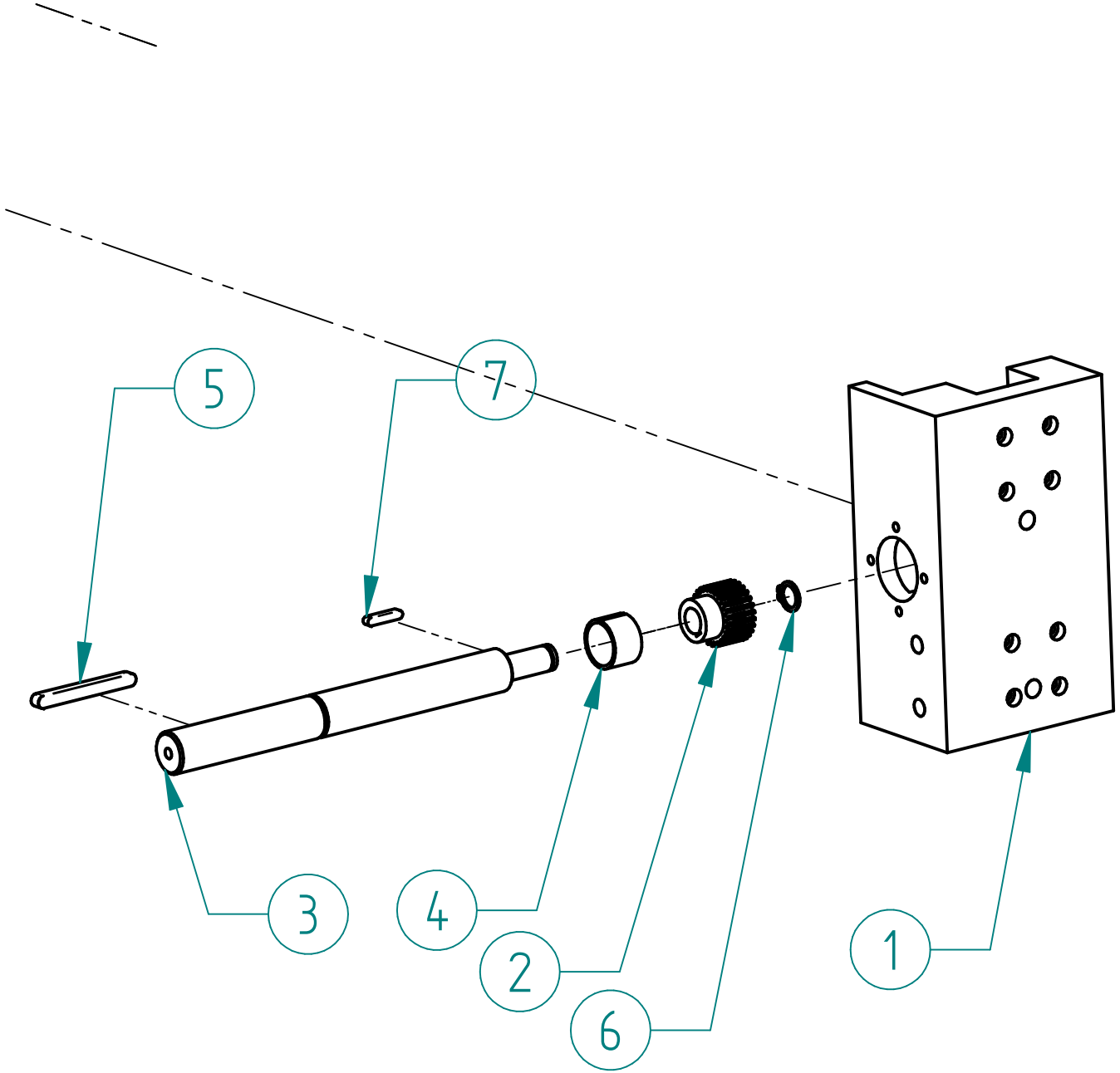

Item	File Name (no extension)	Quantity
	DKS – 00549 – DK 400 XL MOTORIZED POST ELEVATION UNIT	
1	DKS – 00530 – DK 400 XL MOTORIZED POST ELEVATION UNIT BASE PLATE	1
2	DKS – 00535 – DK 400_600_900 MOTORIZED POST ELEVATION PINION	1
3	DKS – 00538 – DK 400_600_900 MOTORIZED POST ELEVATION PINION SHAFT	1
4	GSP – 00386 – PAP 2015 BUSH	1
5	GSP – 00676 – 6x6x56 KEY	1
6	GSP – 00647 – SNAP RING 11X1	1
7	GSP – 00674 – 4x4x20 KEY	1

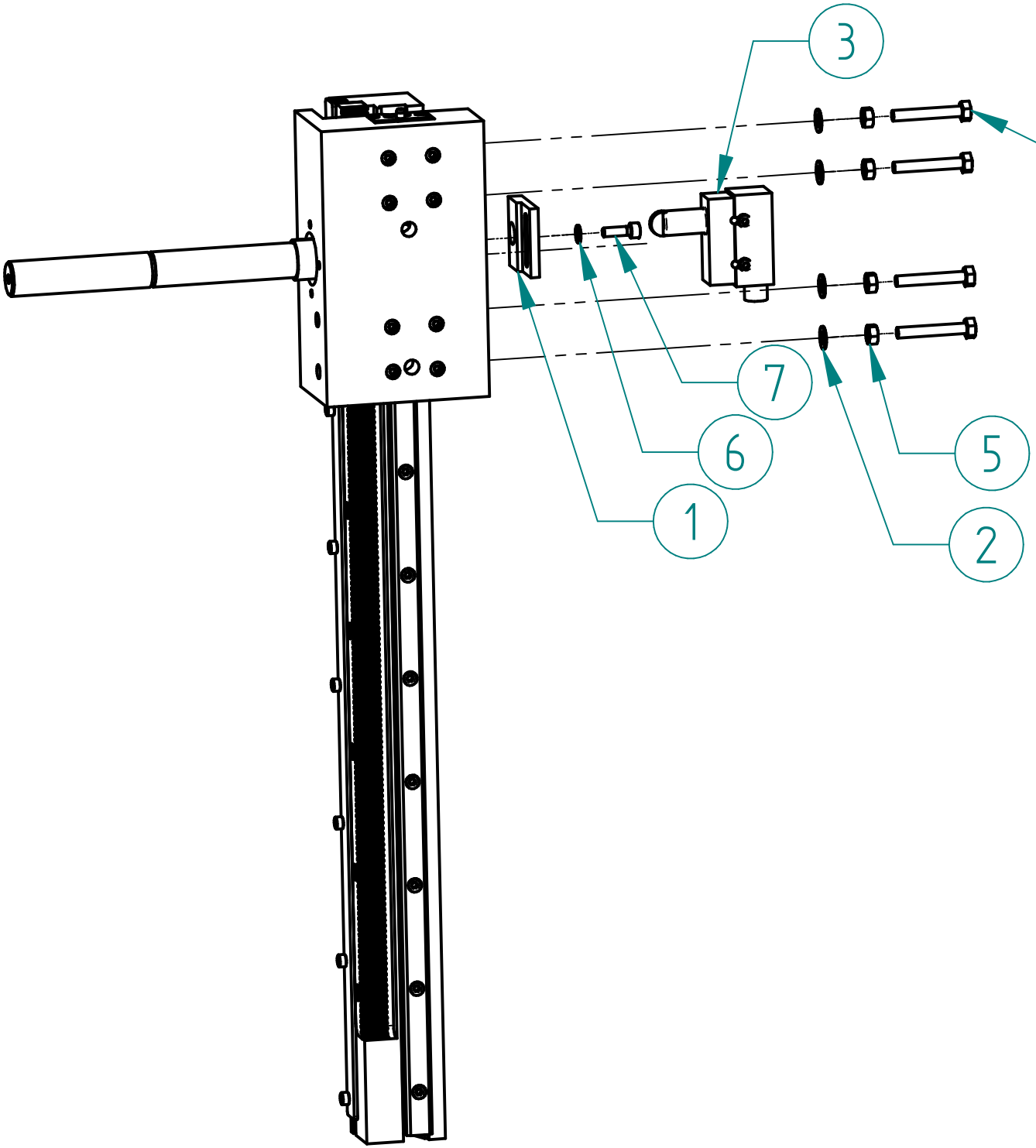

Item	File Name (no extension)	Quantity
	DKS – 00549 – DK 400 XL MOTORIZED POST ELEVATION UNIT	
1	DKS – 00528 – DK 400_600_900 MOTORIZED POST ELEVATION SWITCH CONNECTION LIM	1
2	GSP – 00274 – M6 WASHER	4
3	GSP – 00639 – EMAS MN2MUM3 – SWITCH – DK COUNTER TENSION SWITCH	1
4	GSP – 00127 – M6x40 HEXAGON BOLT	4
5	GSP – 00257 – M6 NUT	4
6	GSP – 00273 – M5 WASHER	1
7	GSP – 00014 – M5X16 IMBUS BOLT	1

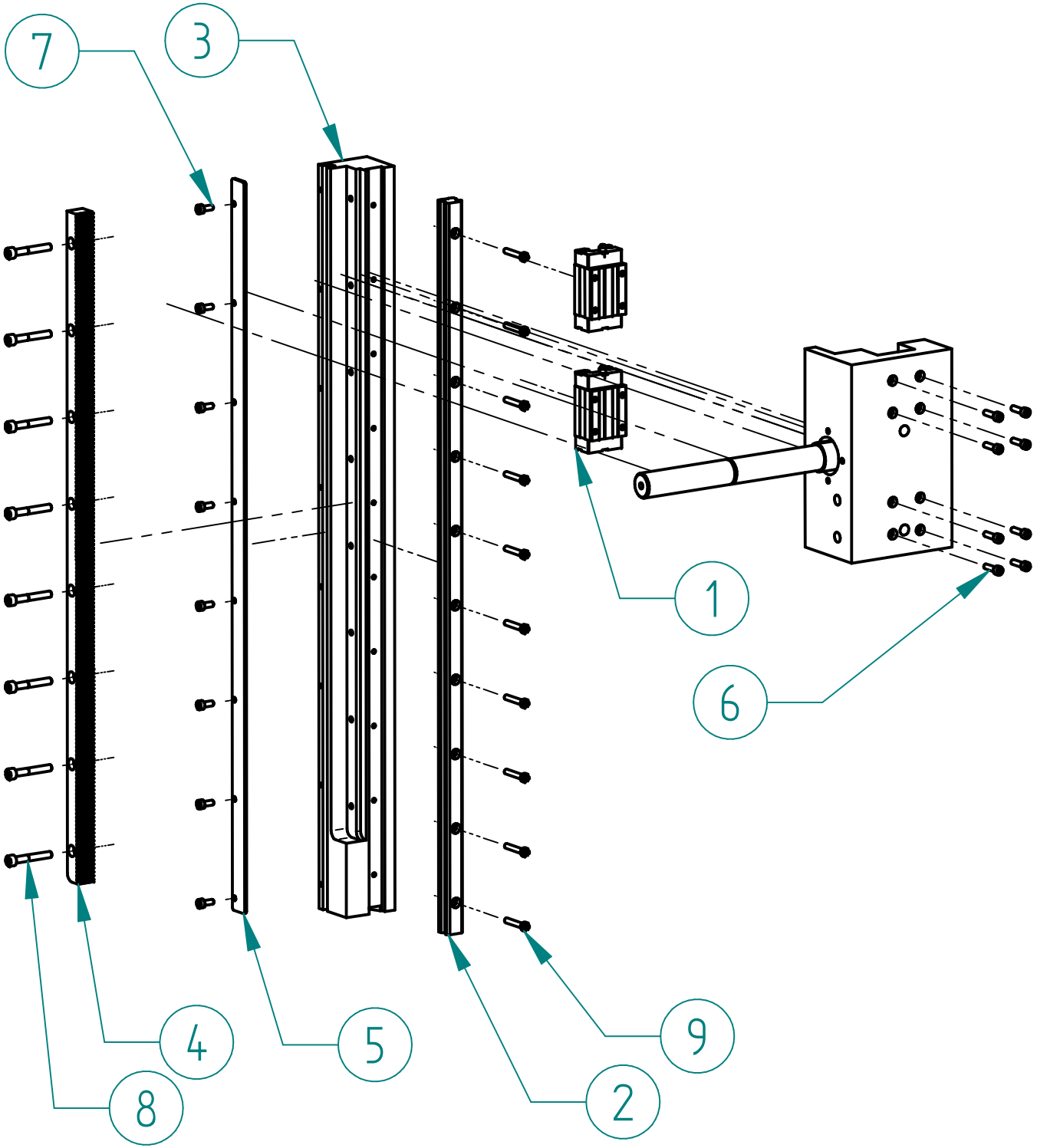

Item	File Name (no extension)	Quantity
	DKS – 00549 – DK 400 XL MOTORIZED POST ELEVATION UNIT	
1	GSP – 00454 – LLTHC 15 R TOP5 SKF BEARING – TAS SL MAIN GRINDER LINEAR BEARING	2
2	GSP – 00699 – H15x590 LINEAR RAIL	1
3	DKS – 00533 – DK 400_600_900 MOTORIZED POST ELEVATION RACK COLUMN	1
4	DKS – 00532 – DK 400_600_900 MOTORIZED POST ELEVATION RACK GEAR	1
5	DKS – 00534 – DK 400_600_900 MOTORIZED POST ELEVATION CABLE COVER PART	1
6	GSP – 00007 – M4X16 IMBUS BOLT	8
7	GSP – 00006 – M4X10 IMBUS BOLT	8
8	GSP – 00018 – M5x35 IMBUS BOLT	8
9	GSP – 00009 – M4X25 IMBUS BOLT	10

TABLE GROUP

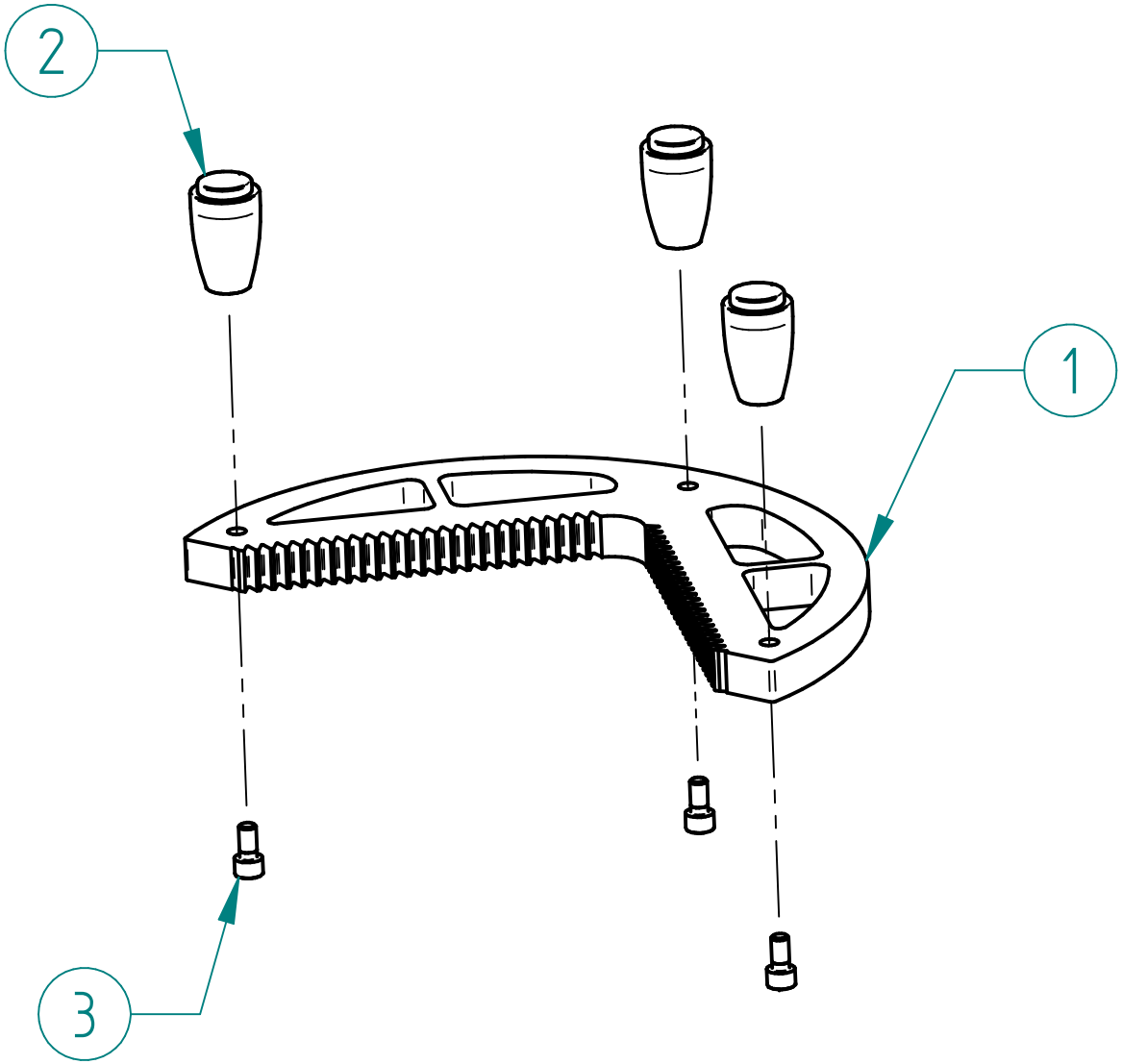

Item	File Name (no extension)	Quantity
	DKO – WHJ – WORKPIECE HOLDING JAW WITH HANDLES	
1	DKS – 00161 – WORKPIECE HOLDING JAW	1
2	GSP – 00600 – DK 400 XL WORKPIECE HOLDING JAW M8 HANDLE	3
3	GSP – 00031 – M8X16 IMBUS BOLT	3

FIXED TABLE GROUP

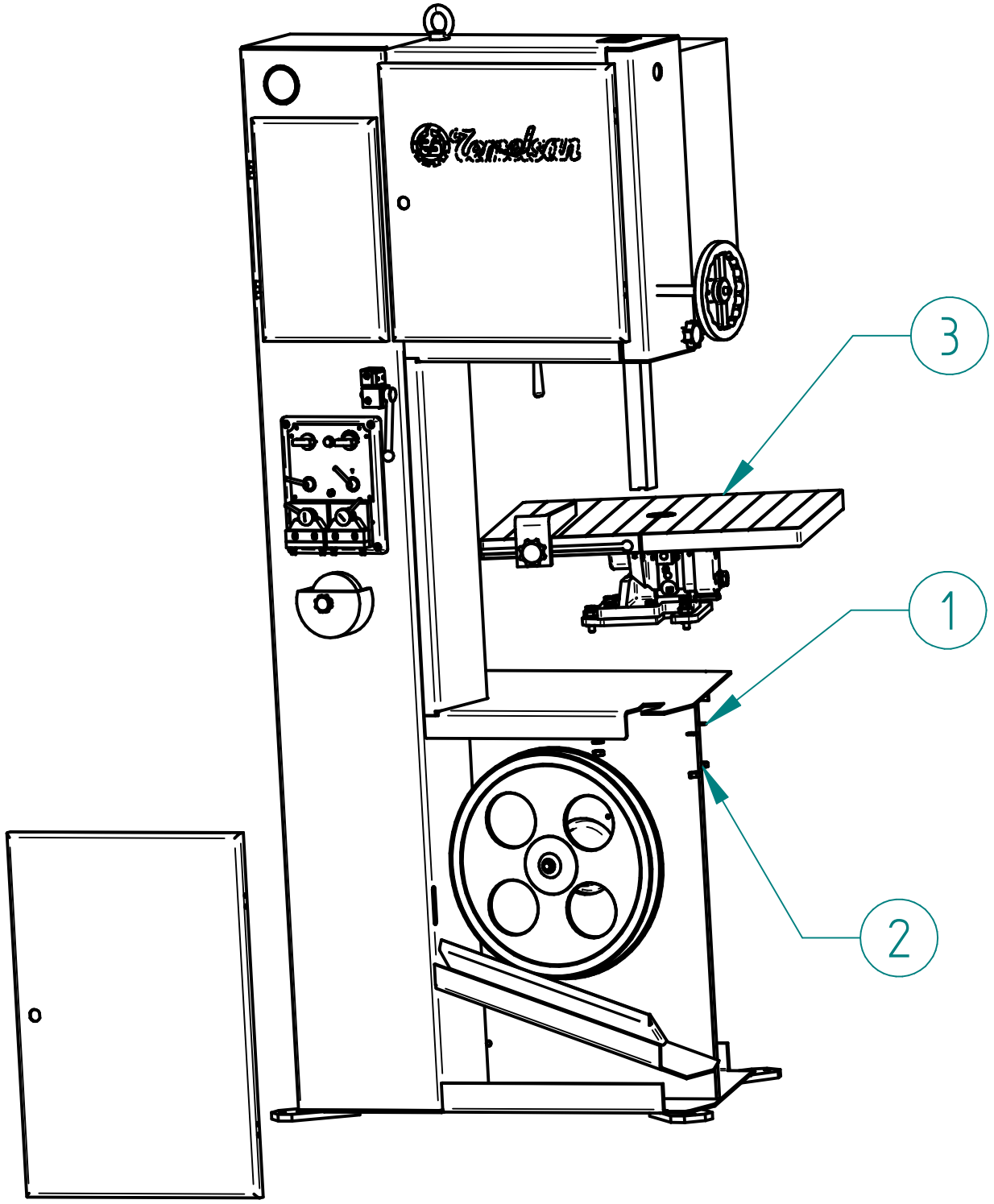

Item	File Name (no extension)	Quantity
	DK 400 XL FIXED TABLE	
1	GSP - 00276 - M10 WASHER	4
2	GSP - 00259 - M10 NUT	4
3	DKS - 00235 - DK 400 XL FIXED TABLE&ANGULATE TABLE EQUIPMENT	1

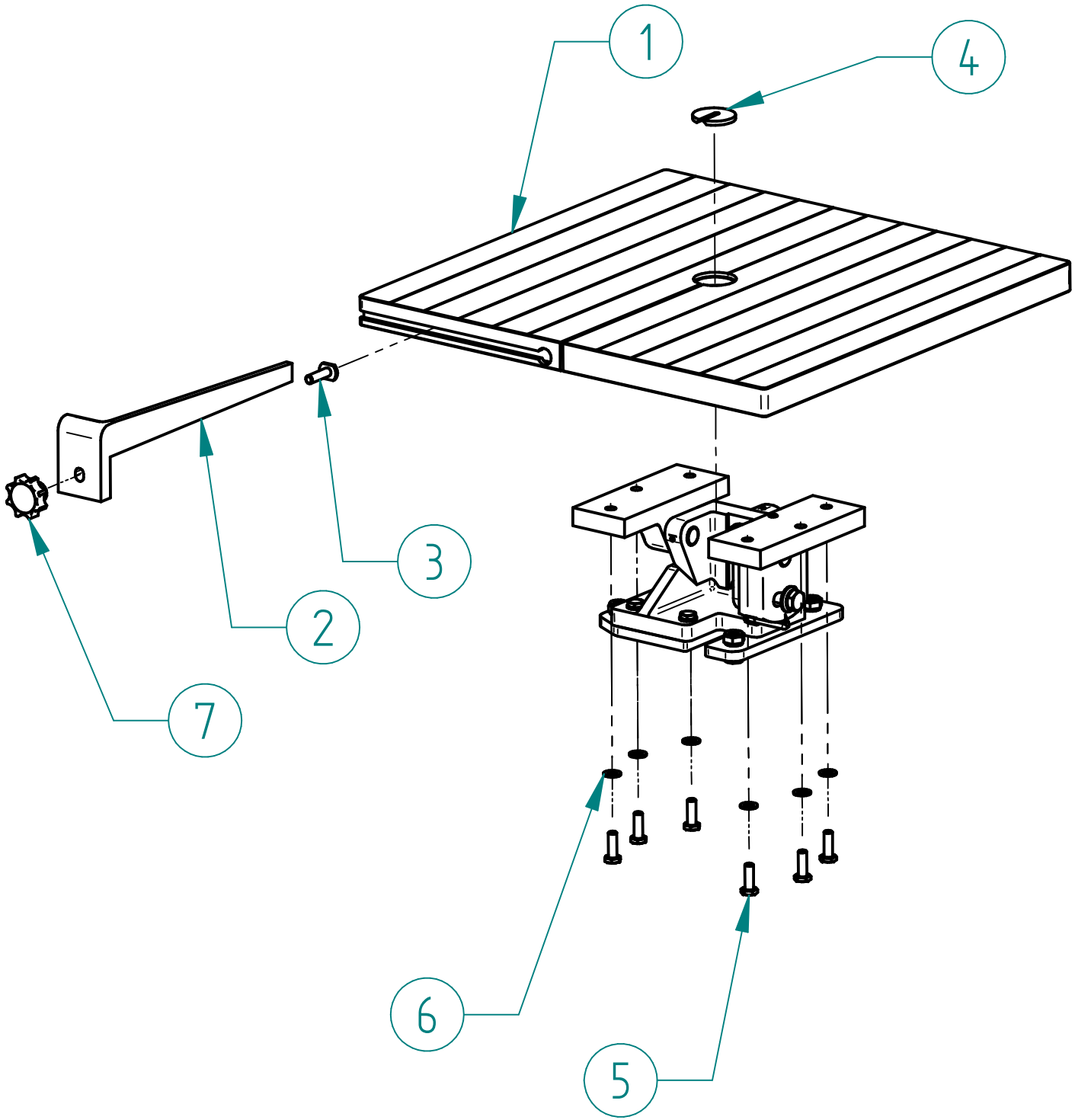

Item Number	File Name (no extension)	Quantity
	DKS – 00235 – DK 400 XL FIXED TABLE&ANGULATE TABLE EQUIPMENT	
1	DKS – 00018 – DK 400 XL FIXED TABLE	1
2	DKS – 00123 – DK 400 XL FIXED TABLE SET SQUARE	1
3	DKS – 00124 – DK 400 XL FIXED TABLE SET SQUARE SCREW	1
4	DKS – 00022 – DK 400 XL FIXED TABLE CENTER LIM	1
5	GSP – 00167 – M10x30 HEXAGON BOLT	6
6	GSP – 00276 – M10 WASHER	6
7	GSP – 00575 – M10X50 STAR KNOB	1

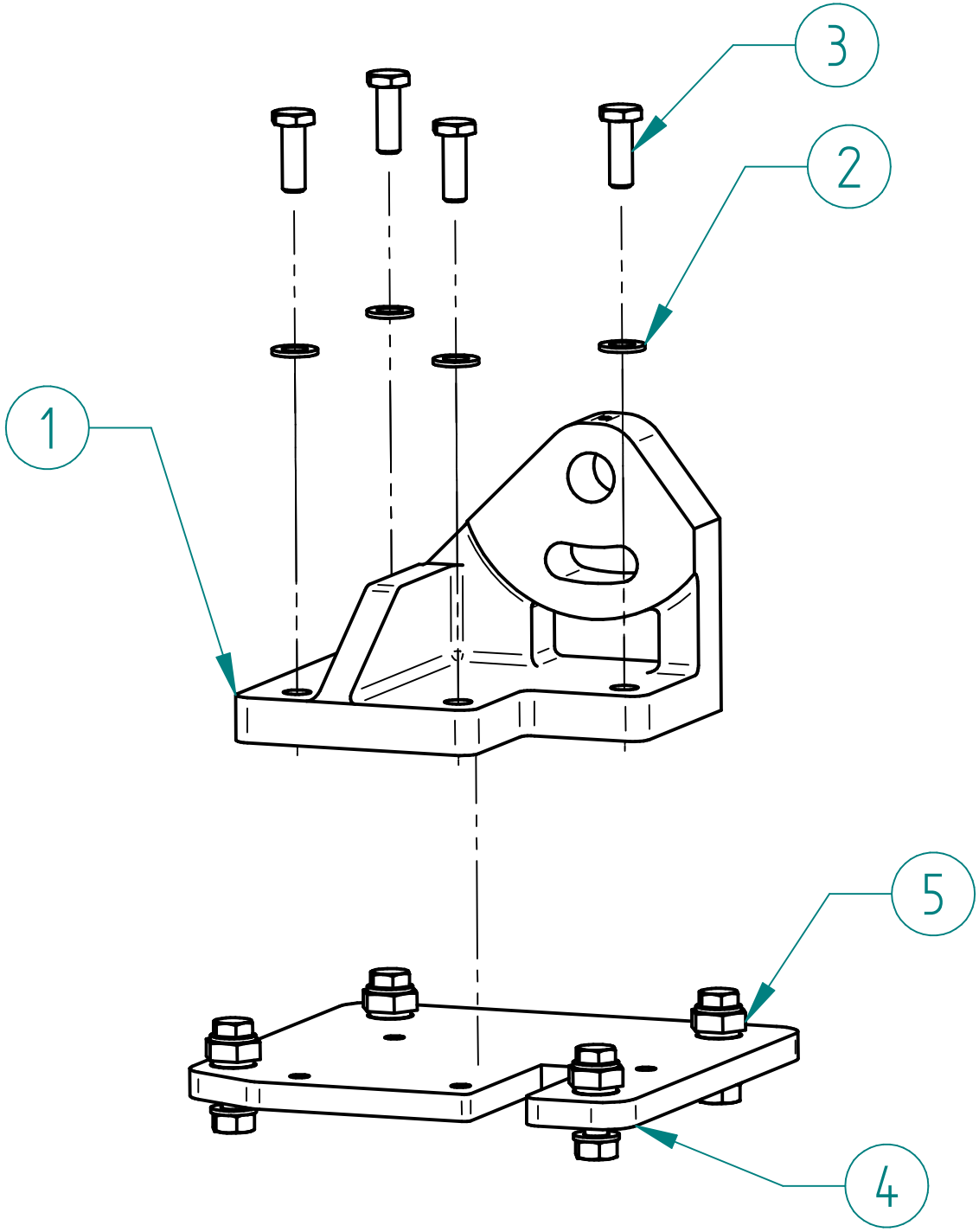

Item	File Name (no extension)	Quantity
	DKS - 00235 - DK 400 XL FIXED TABLE&ANGULATE TABLE EQUIPMENT	
1	DKS - 00118 - DK 400 XL ANGULATE TABLE MAIN BODY	1
2	GSP - 00276 - M10 WASHER	4
3	GSP - 00167 - M10x30 HEXAGON BOLT	4
4	DKS - 00119 - DK 400 XL ANGULATE TABLE BOTTOM MAIN PLATE	1
5	DKS - 00234 - DK 400_600_900 ADJUSTMENT SCREW ASSEMBLY	4

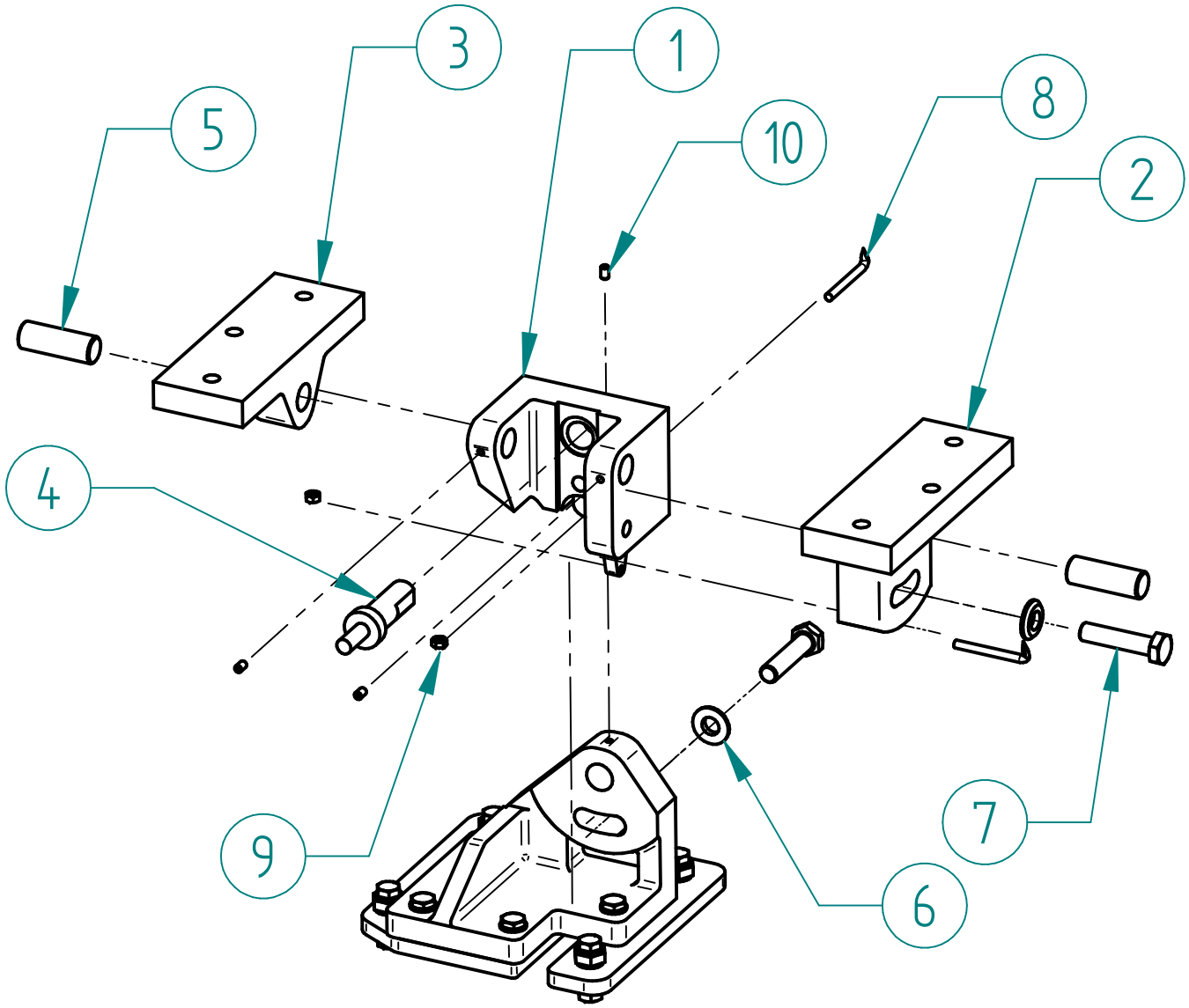

Item	File Name (no extension)	Quantity
	DKS – 00235 – DK 400 XL FIXED TABLE&ANGULATE TABLE EQUIPMENT	
1	DKS – 00120 – DK 400 XL ANGULATE TABLE GUIDE&SHAFT HOUSING PART	1
2	DKS – 00121 – DK 400 XL ANGULATE TABLE RIGHT SIDE MOUNTING ARM	1
3	DKS – 00122 – DK 400 XL ANGULATE TABLE LEFT SIDE MOUNTING ARM	1
4	DKS – 00116 – DK 400 XL ANGULATE TABLE MAIN SHAFT	1
5	DKS – 00115 – DK 400 XL ANGULATE TABLE SIDES SHAFT	2
6	DKS – 00114 – Q14_5-30-5 WASHER – DK 400 XL ANGULATE TABLE WASHER	2
7	GSP – 00186 – M14x60 HEXAGON BOLT	2
8	DKS – 00117 – DK 400 XL ANGULATE TABLE POINTER	2
9	GSP – 00257 – M6 NUT	2
10	GSP – 00299 – M6X10 SETSCREW	3

HYDRAULIC TABLE GROUP

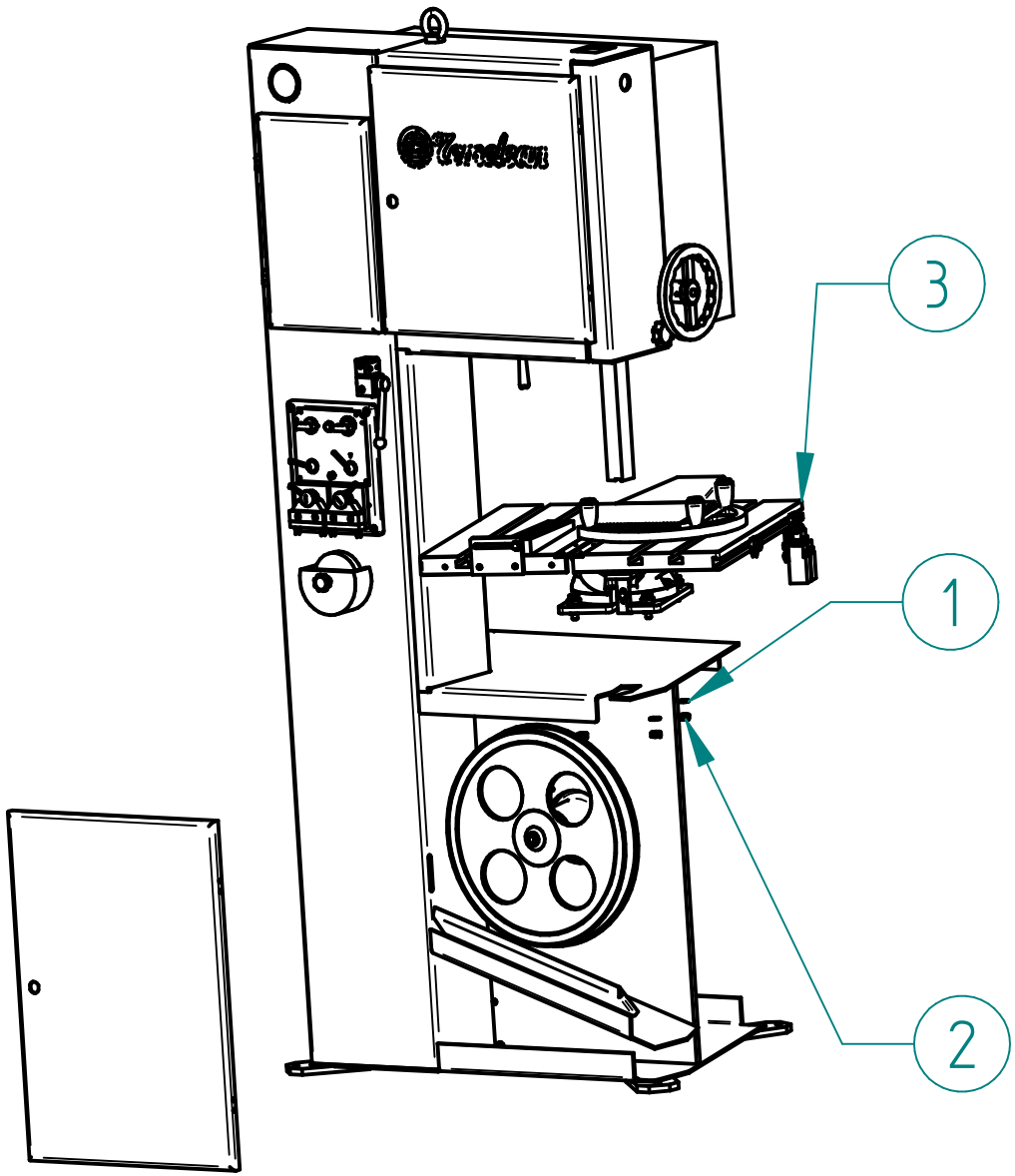

Item	File Name (no extension)	Quantity
	DK 400 XL HS	
1	GSP – 00276 – M10 WASHER	4
2	GSP – 00259 – M10 NUT	4
3	DKO – HMT – 4 – HYDRAULIC MOTION TABLE 1	1

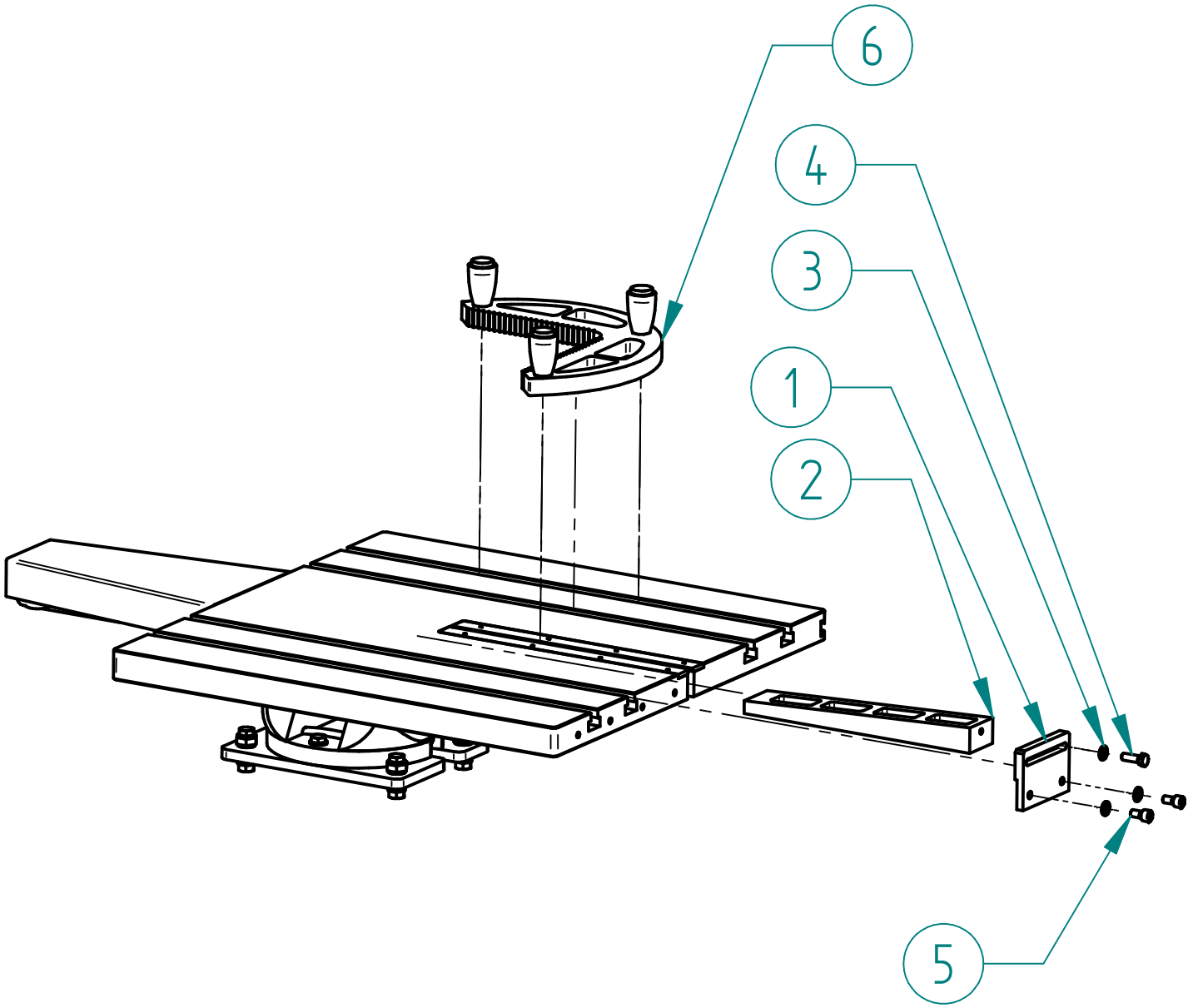

Item Number	File Name (no extension)	Quantity
	DKO – HMT – 4 – HYDRAULIC MOTION TABLE 1	
1	DKS – 00137 – DK 400 XL T-SLOT TABLE SET SQUARE ASSEMBLY LIM	1
2	DKS – 00135 – DK 400 XL T-SLOT TABLE SET SQUARE	1
3	GSP – 00275 – M8 WASHER	3
4	GSP – 00155 – M8x25 HEXAGONAL BOLT	1
5	GSP – 00906 – M8x15 IMBUS BOLT	2
6	DKO – WHJ – WORKPIECE HOLDING JAW WITH HANDLES	1

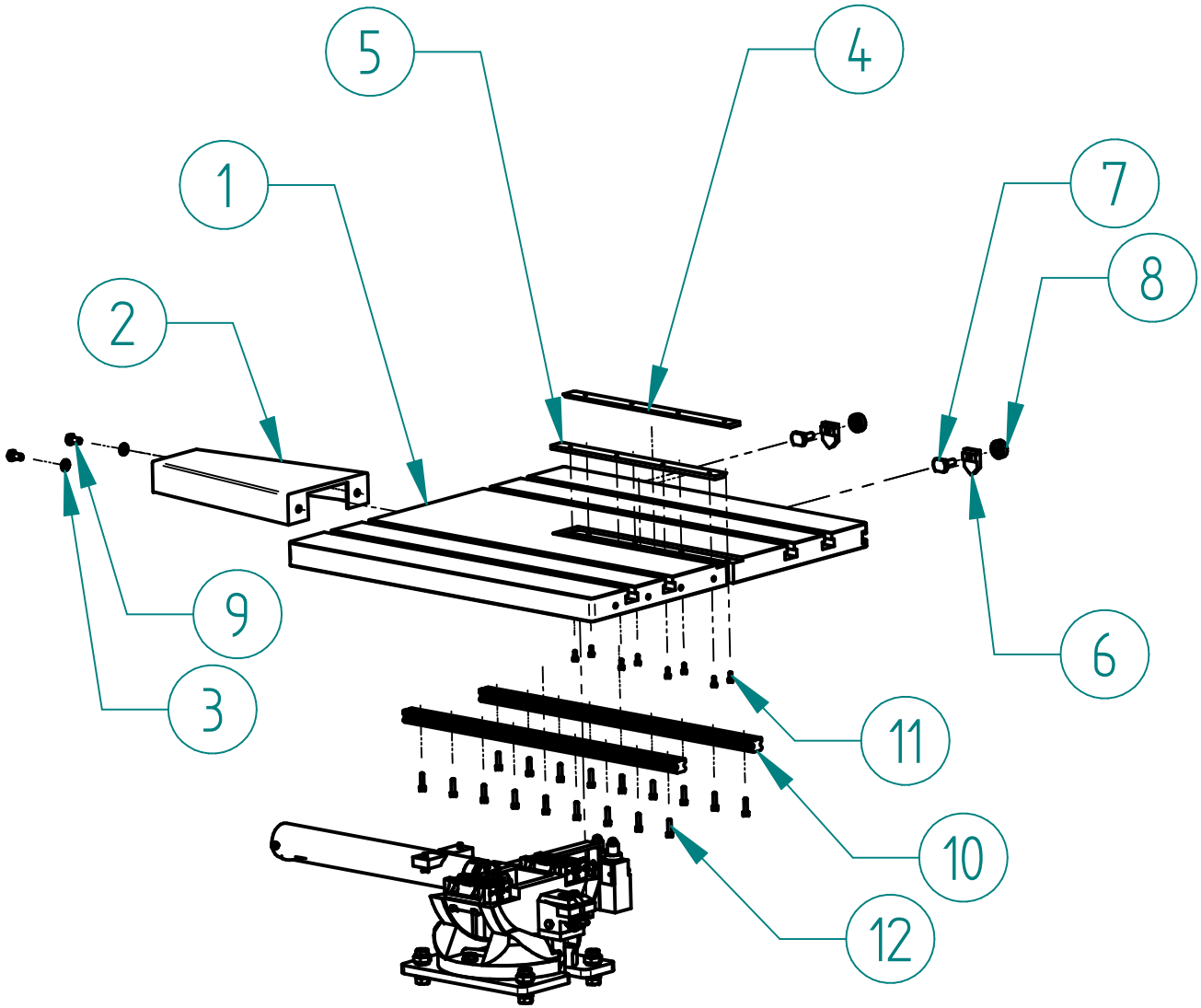

Item	File Name (no extension)	Quantity
	DKO – HMT – 4 – HYDRAULIC MOTION TABLE 1	
1	DKS – 00019 – DK 400 T-SLOT TABLE	1
2	DKS – 00146 – DK 400 XL T-SLOT TABLE PISTON PROTECTION	1
3	GSP – 00275 – M8 WASHER	4
4	DKS – 00148 – DK 400 XL T-SLOT TABLE CENTER LIM RIGHT	1
5	DKS – 00147 – DK 400 XL T-SLOT TABLE CENTER LIM LEFT	1
6	DKS – 00151 – DK 400 XL T-SLOT TABLE SWITCH LIM	2
7	DKS – 00149 – DK 400 XL T-SLOT TABLE SWITCH SCREW	2
8	DKS – 00150 – DK 400 XL T-SLOT TABLE SWITCH NUT	2
9	GSP – 00140 – M8X16 HEXAGON BOLT	2
10	GSP – 00757 – H20x530 LINEAR	2
11	GSP – 00006 – M4X10 IMBUS BOLT	12
12	GSP – 00015 – M5X20 IMBUS BOLT	18

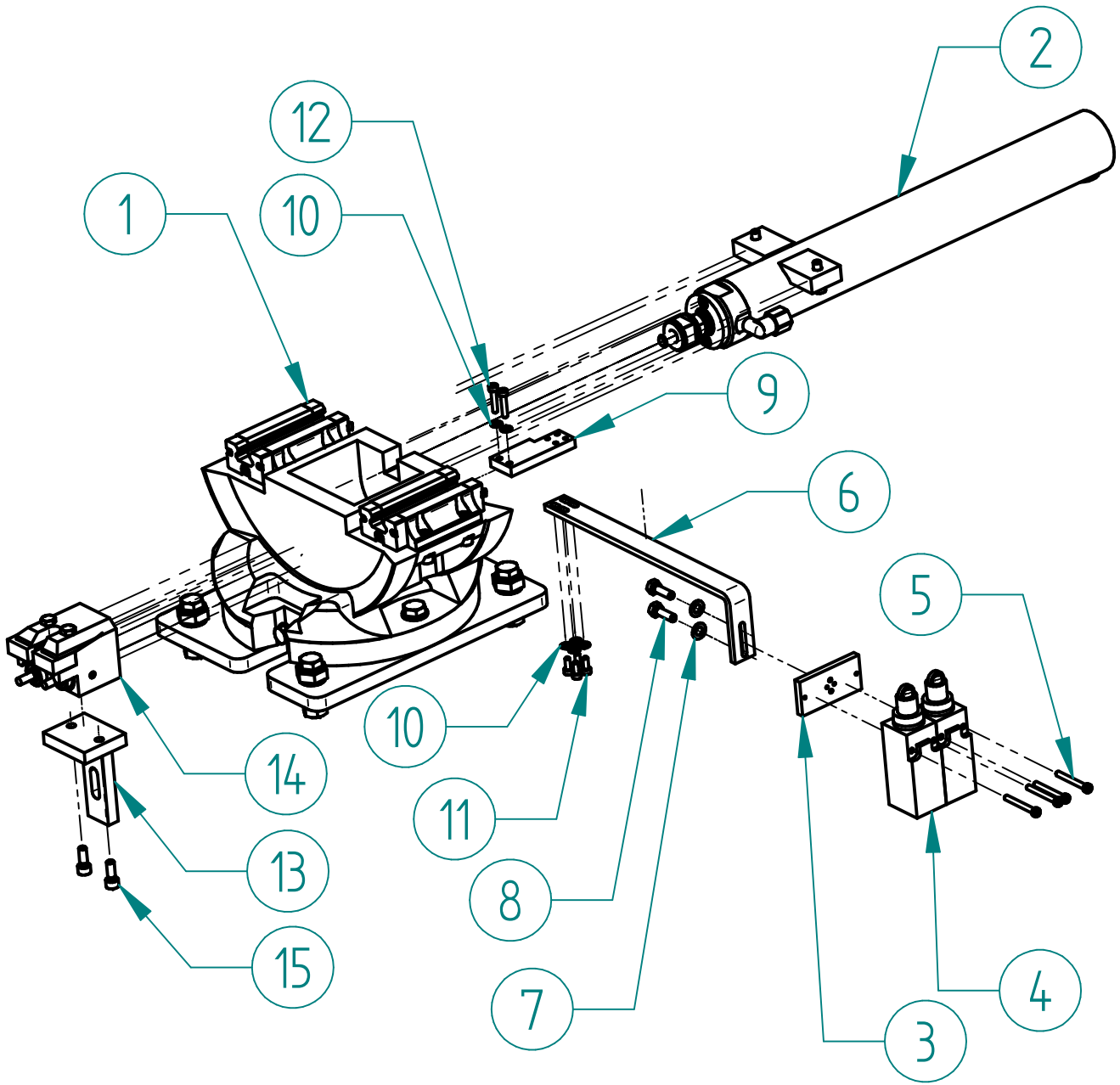

Item	File Name (no extension)	Quantity
	DKO – HMT – 4 – HYDRAULIC MOTION TABLE 1	
1	DKS – 00233 – DK 400 XL TABLE TILT EQUIPMENT	1
2	DKS – 00232 – DK 400 XL HYDRAULIC MOTION TABLE PISTON	1
3	DKS – 00152 – DK 400 XL T-SLOT TABLE SWITCH ASSEMBLY LIM 1	1
4	GSP – 00639 – L3K13MUM33 – SWITCH – DK 400 XL SWITCH	2
5	GSP – 00641 – M4X35 SCREW	4
6	DKS – 00153 – DK 400 XL T-SLOT TABLE SWITCH ASSEMBLY PART	1
7	GSP – 00274 – M6 WASHER	2
8	GSP – 00139 – M6x20 HEXAGON BOLT	2
9	DKS – 00160 – DK 400 XL T-SLOT TABLE SWITCH ASSEMBLY LIM 2	1
10	GSP – 00272 – M4 WASHER	6
11	GSP – 00006 – M4X10 IMBUS BOLT	4
12	GSP – 00008 – M4x20 IMBUS BOLT	2
13	DKS – 00214 – DK 400 XL SQUARE GUIDE LOWER ASSEMBLY LIM	1
14	DKS – 00215 – DK 400 XL SQUARE GUIDE LOWER GROUP 20MM x 27MM	1
15	GSP – 00022 – M6X16 IMBUS BOLT	2

Item	File Name (no extension)	Quantity
	DKO – HMT – 4 – HYDRAULIC MOTION TABLE 1	
1	DKS – 00215 – DK 400 XL SQUARE GUIDE BLOCK LOWER GROUP 20MM x 27MM	1

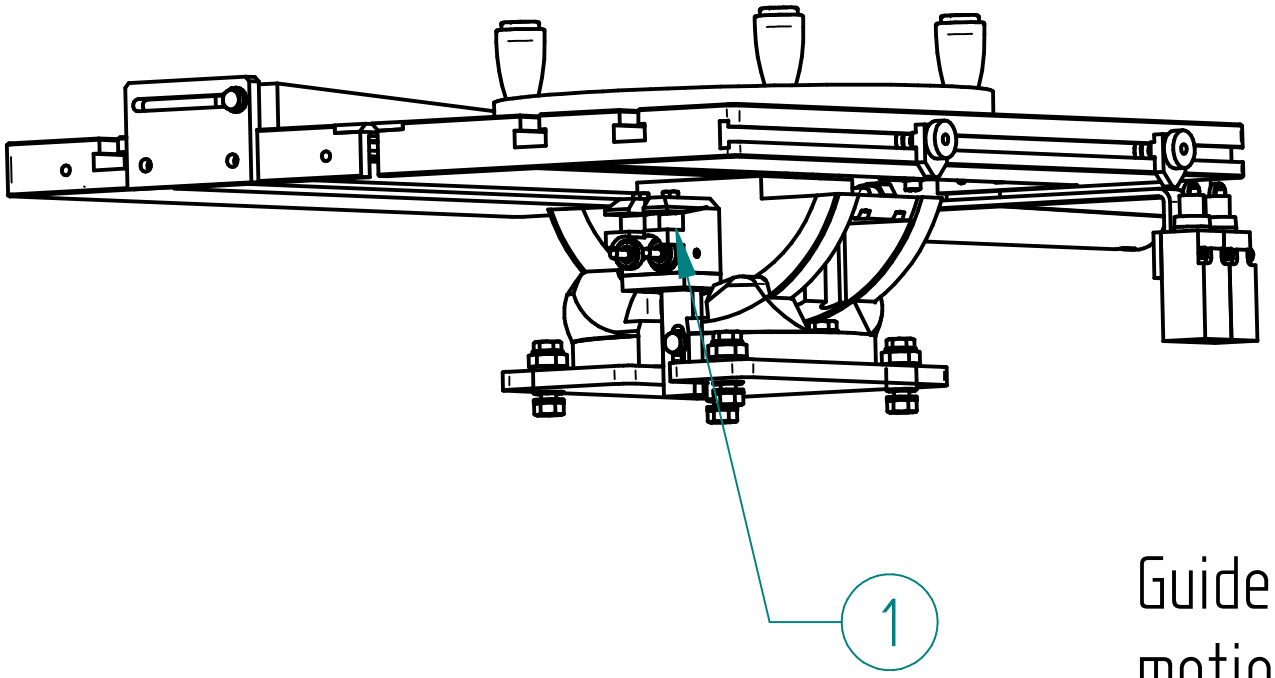

Guide types on the hydraulic motion table are variable, depends on the machine type and model.

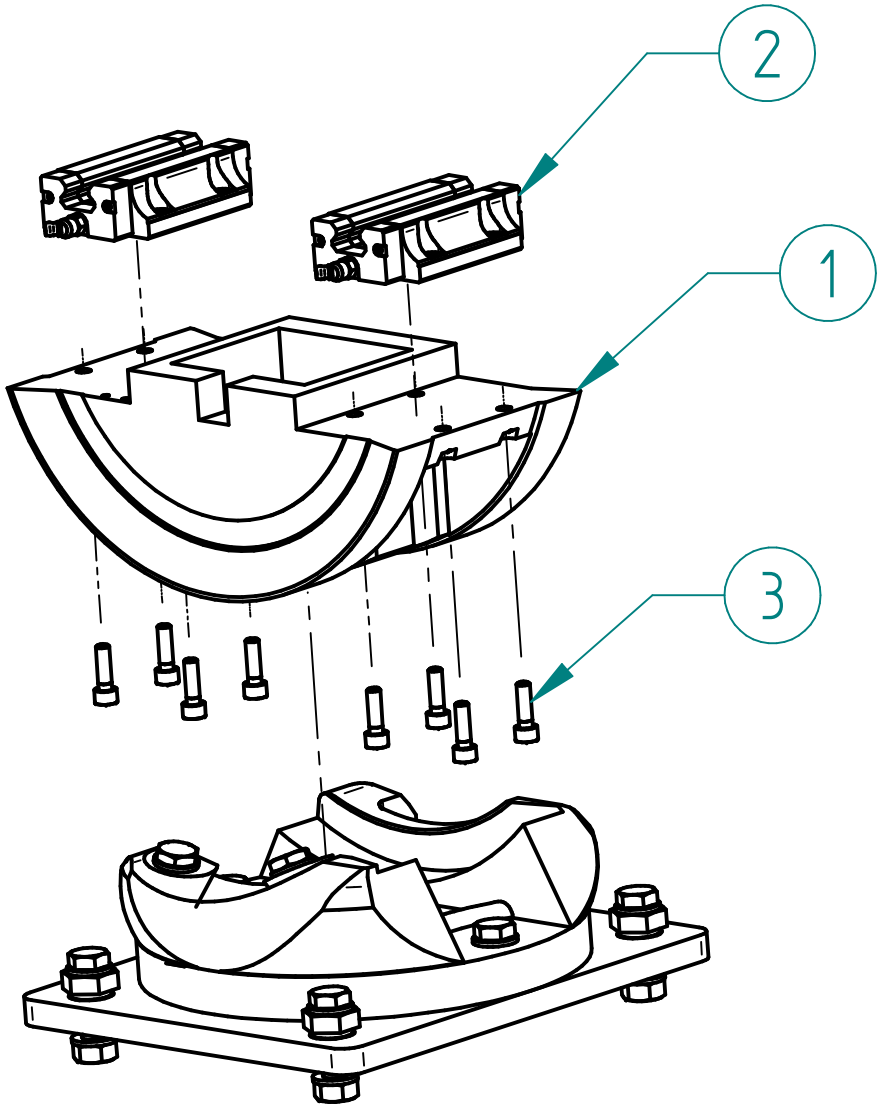

Item	File Name (no extension)	Quantity
	DKS – 00233 – DK 400 XL TABLE TILT EQUIPMENT	
1	DKS – 00159 – DK 400 XL T-SLOT TABLE TILT EQUIPMENT ANGULAR PART	1
2	GSP – 00608 – LLTHC 20 LA T0 P5 SKF LINEAR BEARING – DK 400 XL TABLE TILT EQUIPMENT	2
3	GSP – 00023 – M6x20 IMBUS BOLT	8

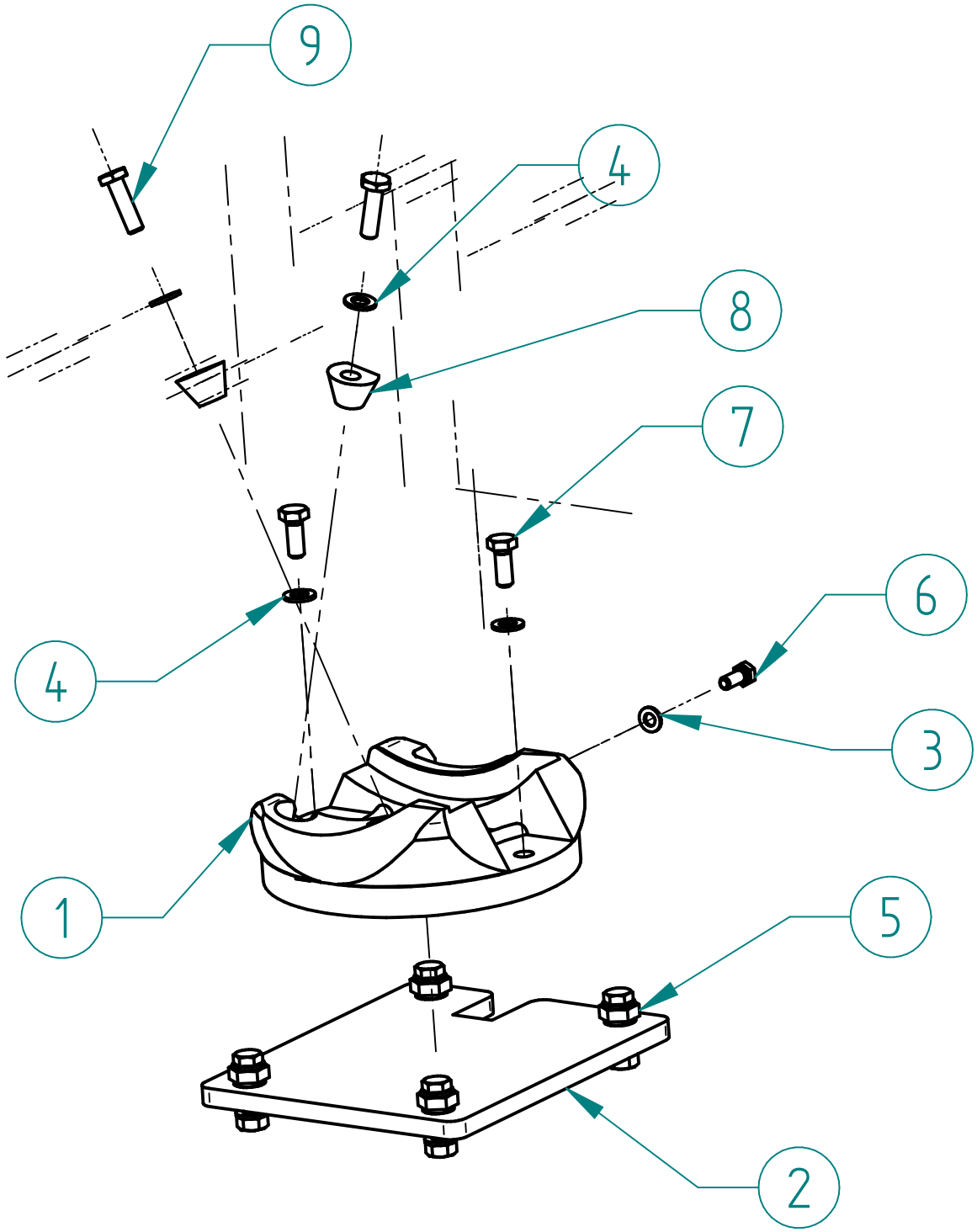

Item	File Name (no extension)	Quantity
	DKS – 00233 – DK 400 XL TABLE TILT EQUIPMENT	
1	DKS – 00157 – DK 400 XL T-SLOT TABLE TILT EQUIPMENT BASE	1
2	DKS – 00158 – DK 400 XL T-SLOT TABLE TILT EQUIPMENT PLATE	1
3	GSP – 00275 – M8 WASHER	1
4	GSP – 00276 – M10 WASHER	4
5	DKS – 00234 – DK 400_600_900 ADJUSTMENT SCREW ASSEMBLY	4
6	GSP – 00154 – M8x20 HEXAGON BOLT	1
7	GSP – 00156 – M10x25 HEXAGON BOLT	2
8	DKS – 00156 – DK 400_600_900 T-SLOT TABLE MOTIONAL STAND TIGHTENING WASHER	2
9	GSP – 00168 – M10x35 HEXAGON BOLT	2

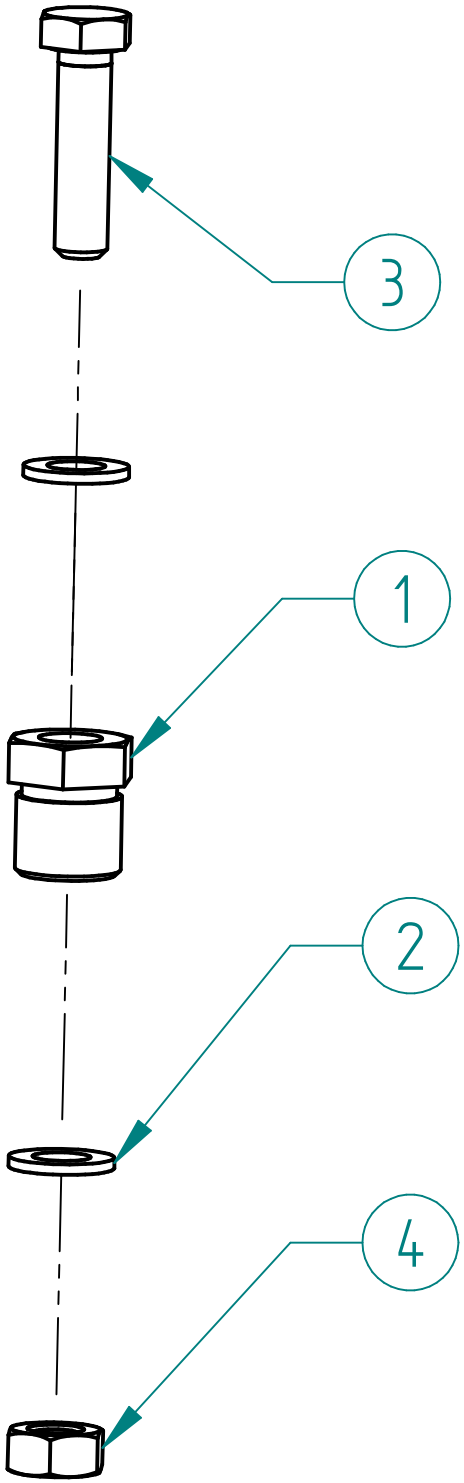

Item Number	File Name (no extension)	Quantity
	DKS – 00234 – DK 400_600_900 ADJUSTMENT SCREW ASSEMBLY	
1	DKS – 00113 – DK 400_600_900 ANGULATE TABLE ADJUSTMENT SCREW	1
2	GSP – 00276 – M10 WASHER	2
3	GSP – 00157 – M10x40 HEXAGON BOLT	1
4	GSP – 00259 – M10 NUT	1

	File Name (no extension)	Quantity
	DKS - 00232 - DK 400 XL HYDRAULIC MOTION TABLE PISTON	
1	HSP - 00052 - HYDRAULIC 1_4 COPPER WASHER	1
2	HSP - 00002 - HYDRAULIC FITTING 1_4-10	1
3	GSP - 00274 - M6 WASHER	2
4	GSP - 00023 - M6x20 IMBUS BOLT	2
5	GSP - 00021 - M6X12 IMBUS BOLT	2
6	DKS - 00142 - DK 400 XL T-SLOT TABLE PISTON SHAFT FRONT GUIDING PART	1
7	DKS - 00141 - DK 400 XL T-SLOT TABLE PISTON FRONT FLANGE	1
8	HSP - 00014 - L FITTING DRS 1_8-14	1
9	GSP - 00640 - KASTAS-K05-16X24X5 - DUST SEAL RING	1
10	GSP - 00411 - M4X10 HEX SOCKET COUNTERSUNK HEAD BOLT	2
11	GSP - 00592 - KASTAS-K21-16x26x8 NBR NUTRING	1
12	DKS - 00145 - DK 400 XL T-SLOT TABLE PISTON ASSEMBLY AND STROKE ADJUSTMENT PART	1
13	GSP - 00259 - M10 NUT	1
14	GSP - 00558 - O-RING 41X3	1
15	GSP - 00559 - O-RING 38X3	1

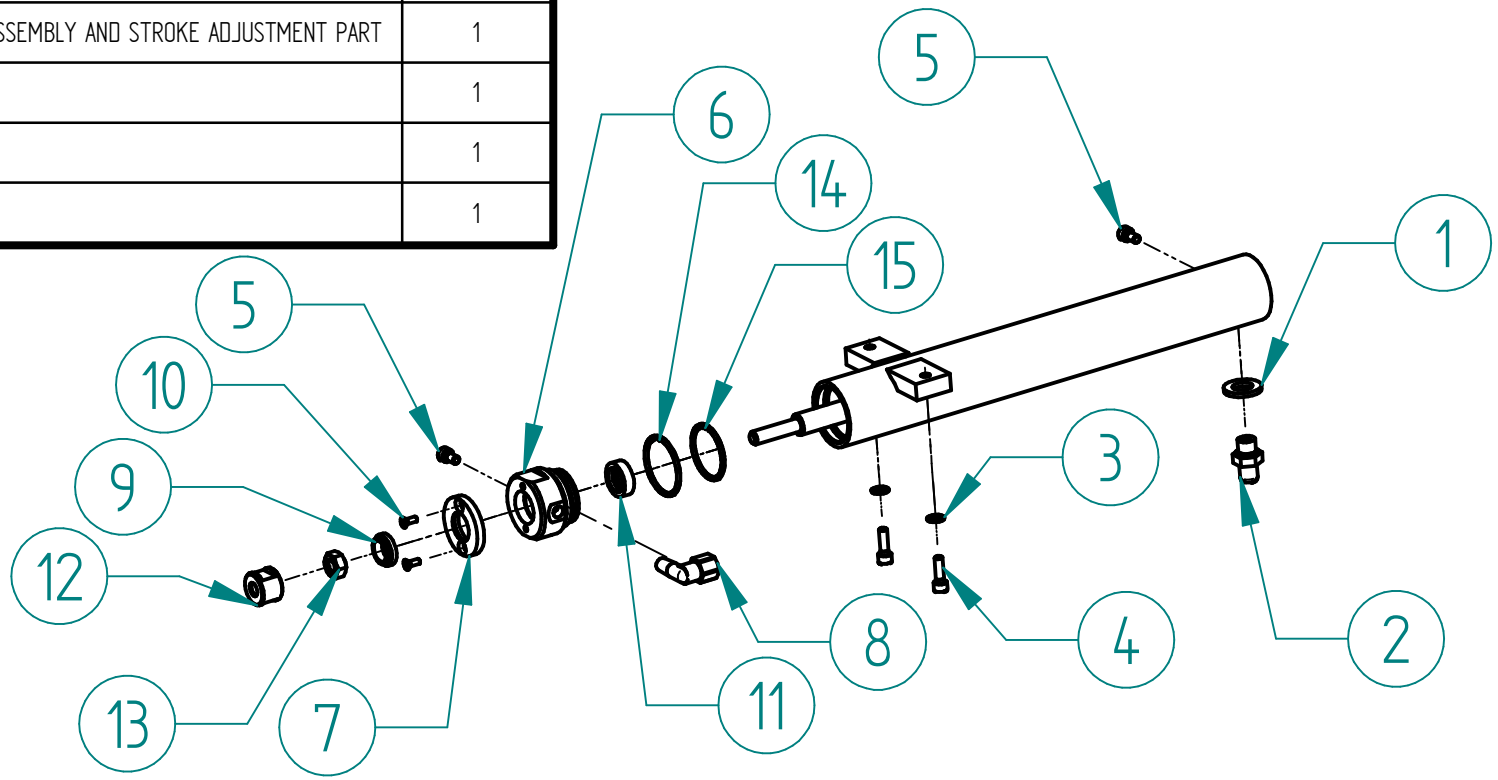

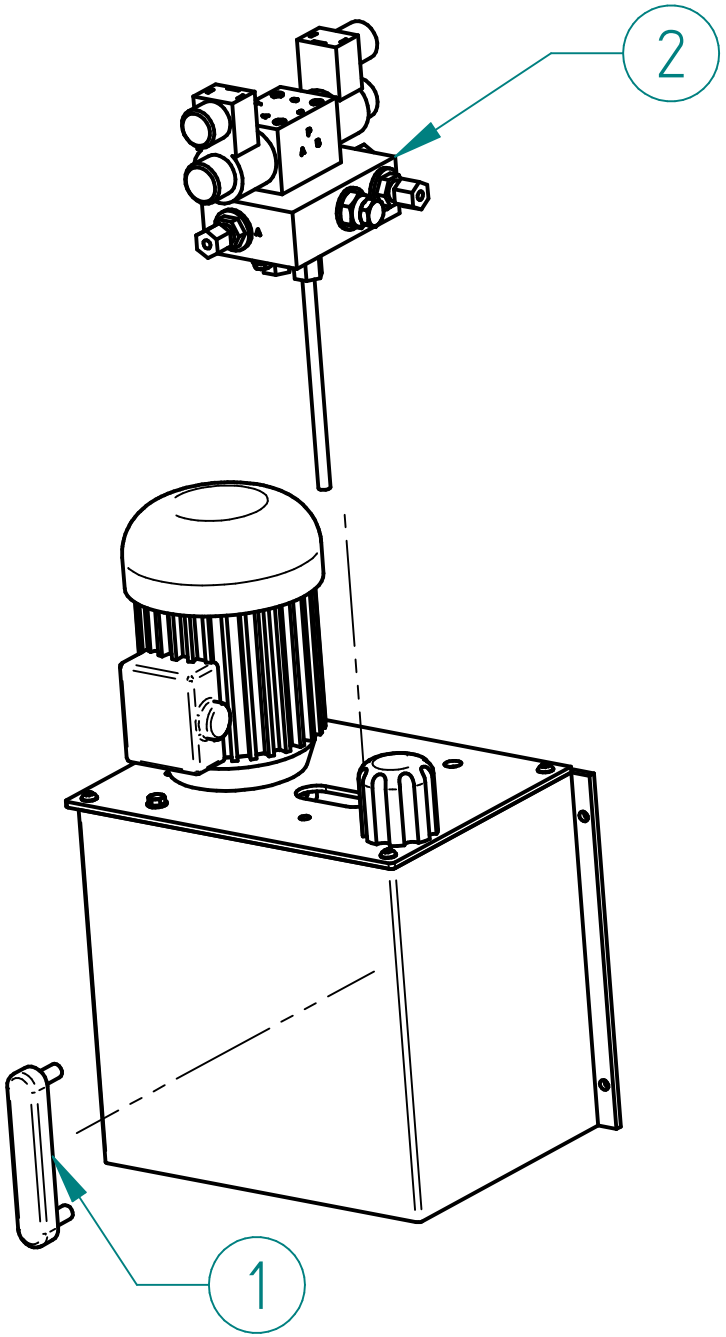

Item Number	File Name (no extension)	Quantity
	DKO – HMT – 4 – HYDRAULIC MOTION TABLE 2	
1	HSP – 00077 – OIL LEVEL INDICATOR (76mm)	1
2	DK COUNTER HYDRAULIC TANK VALVE GROUP	1

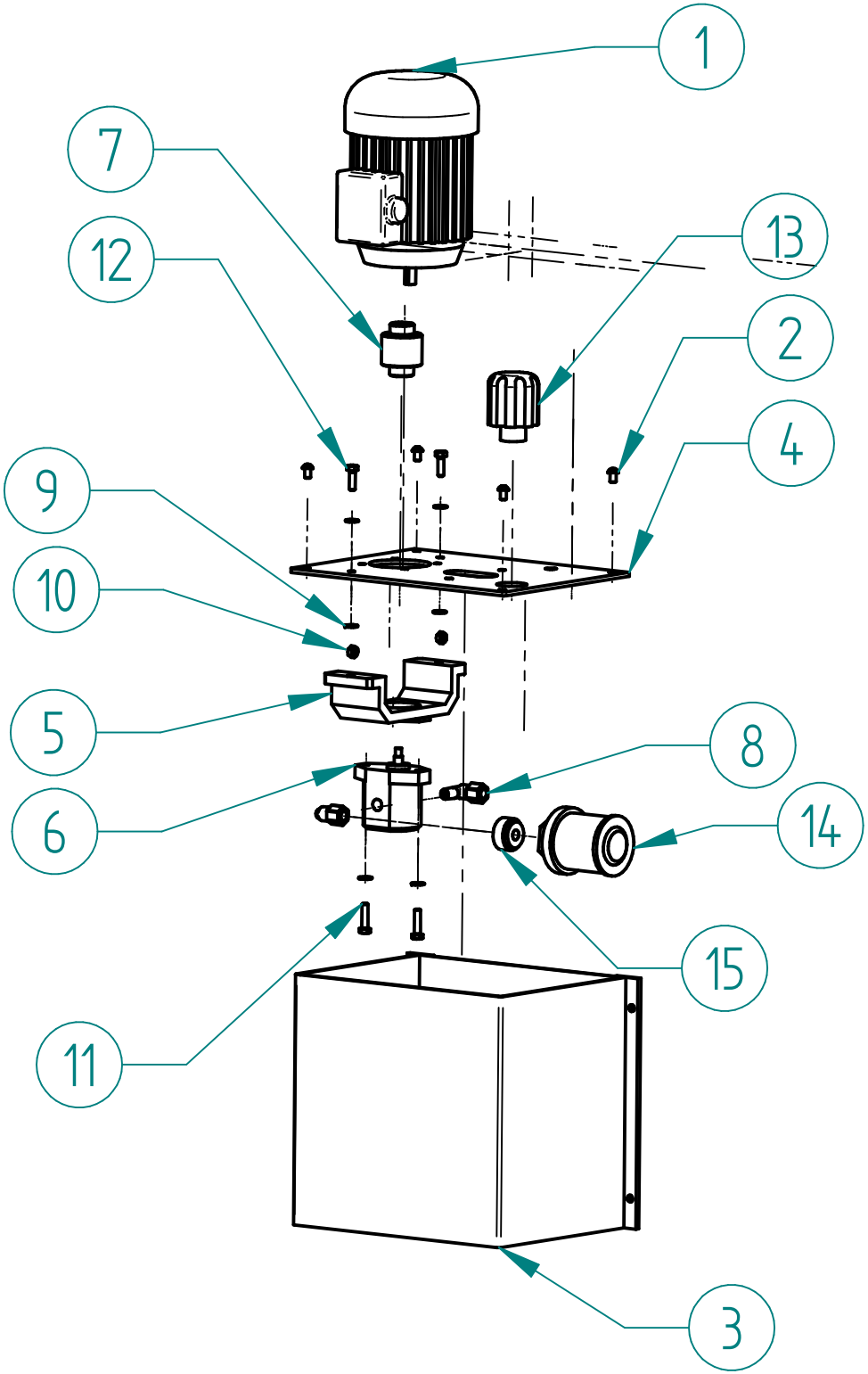

Item	File Name (no extension)	Quantity
	DKO – HMT – 4 – HYDRAULIC MOTION TABLE 2	
1	GSP – 00646 – WAT 0_25 KW MOTOR – Q2EFC63M4C-HO – DK 400 XL T-SLOT TABLE MOTIONAL STAND HYDRAULIC UNIT MOTOR	1
2	GSP – 00244 – M6X10 LENTIL HEAD BOLT	4
3	DKS – 00178 – DK 400 XL T-SLOT TABLE MOTIONAL STAND HYDRAULIC UNIT OIL TANK	1
4	DKS – 00179 – DK 400 XL T-SLOT TABLE MOTIONAL STAND HYDRAULIC UNIT OIL TANK TOP COVER	1
5	DKS – 00169 – DK 400_600_900 PUMP ASSEMBLY FLANGE	1
6	HSP – 00023 – HATTAT 0.5P011CB-H304 GEAR PUMP	1
7	DKS – 00168 – DK 400 XL PUMP COUPLING	1
8	HSP – 00018 – L FITTING DRS 1_4-1_4	2
9	GSP – 00274 – M6 WASHER	6
10	GSP – 00257 – M6 NUT	2
11	GSP – 00125 – M6X25 HEXAGON BOLT	2
12	GSP – 00139 – M6x20 HEXAGON BOLT	2
13	HSP – 00024 – DK TANK LOADING TAP	1
14	HSP – 00009 – 25LT-FILTER	1
15	HSP – 00010 – FILTER TOP COVER	1

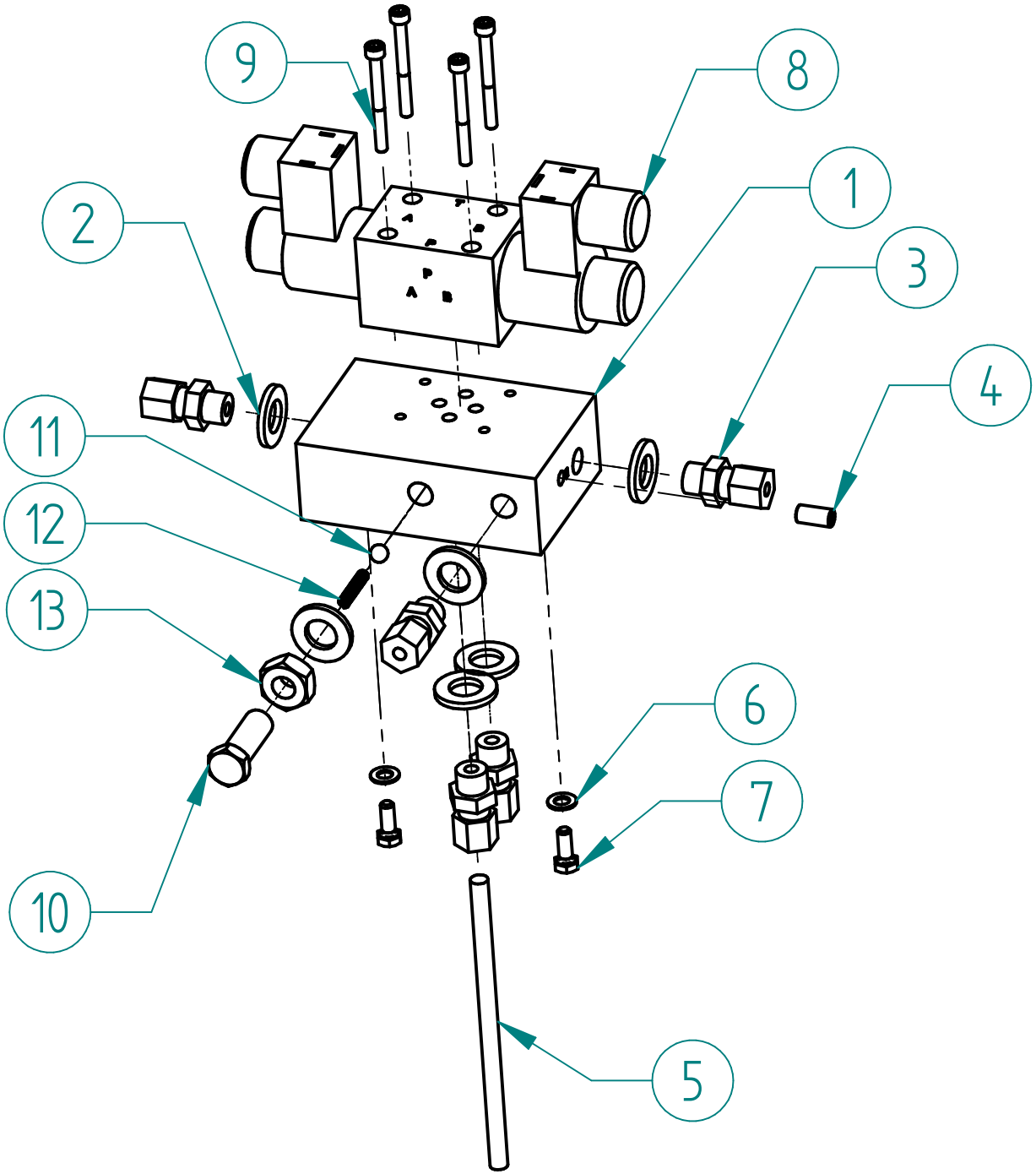

Item	File Name (no extension)	Quantity
	DK COUNTER HYDRAULIC TANK VALVE GROUP	
1	DKS – 00387 – DK COUNTER HYDRAULIC TANK VALVE BLOCK	1
2	HSP – 00052 – HYDRAULIC 1_4 COPPER WASHER	6
3	HSP – 00132 – FITTING DRS 1_4-8	5
4	GSP – 00309 – M8x16 SETSCREW	1
5	HSP – 00026 – DK COUNTER HYDRAULIC VALVE BLOCK Q8 PIPE	1
6	GSP – 00274 – M6 WASHER	2
7	GSP – 00138 – M6x16 HEXAGON BOLT	2
8	HSP – 00084 – SDHE-0714 DC 10S ATOS VALVE	1
9	GSP – 00585 – M5x50 IMBUS BOLT	4
10	DKS – 00163 – DK COUNTER PRESSURE ADJUTMENT SCREW	1
11	GSP – 00691 – Q8 STEEL BALL FOR DK ADJUSTMENT SCREW	1
12	GSP – 00987 – DK PRESSURE ADJUSTMENT SCREW SPRING	1
13	HSP – 00043 – HYDRAULIC 1_4 NUT	1

ALL APPLICABLE GUIDE TYPES

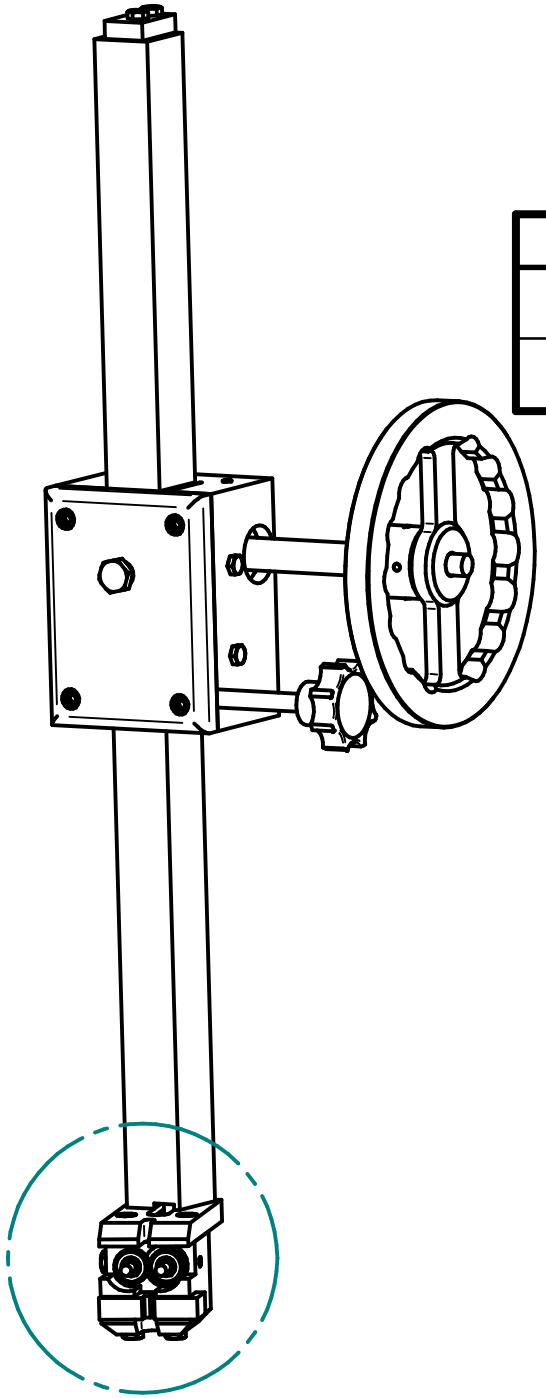

Item	File Name (no extension)	Quantity
1	DKS - 00216 - DK 400 XL SQUARE GUIDE BLOCK UPPER GROUP 20MM x 27MM	1
2	DKS - 00191 - DK 400 XL SQUARE - V GUIDE UPPER ASSEMBLY LIM	1

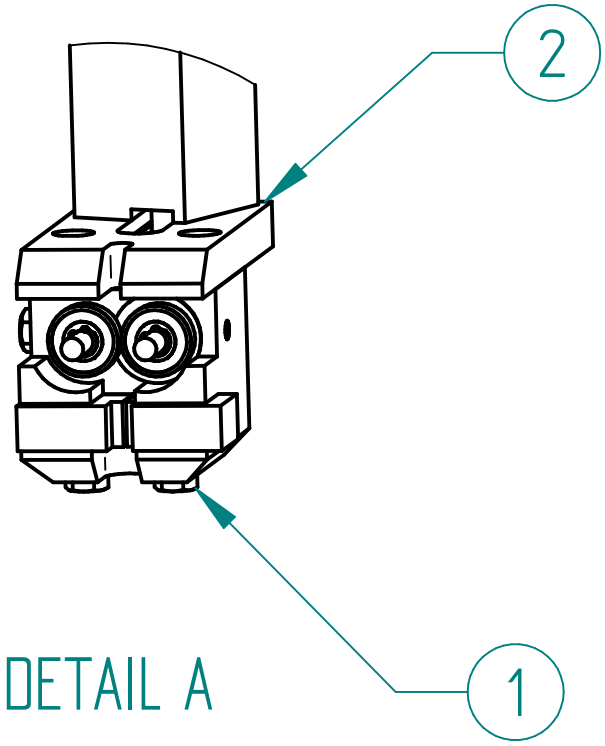

DETAIL A

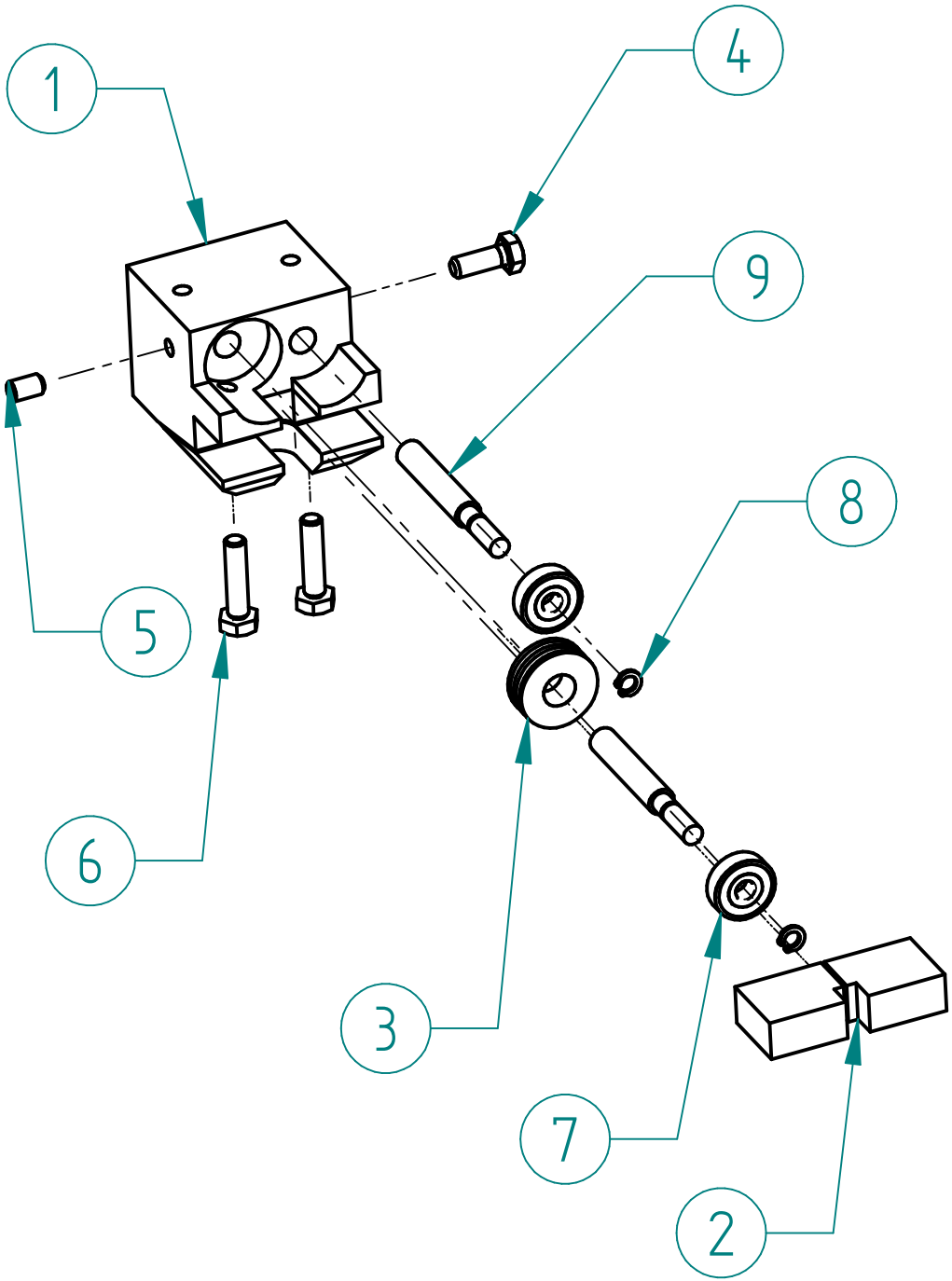

Item	File Name (no extension)	Quantity
	DKS – 00215 – DK 400 XL SQUARE GUIDE BLOCK LOWER GROUP 20MM x 27MM	
1	DKS – 00213 – DK 400 XL SQUARE GUIDE LOWER MAIN BLOCK	1
2	DKS – 00068 – SQUARE GUIDE 20MM – 27MM SET	1
3	GSP – 00472 – 51100 SKF LARGE THRUST BALL BEARING – DK 400 XL SQUARE GUIDE BEARING	1
4	GSP – 00138 – M6x16 HEXAGON BOLT	1
5	GSP – 00299 – M6X10 SETSCREW	1
6	GSP – 00125 – M6X25 HEXAGON BOLT	2
7	GSP – 00462 – 626 2RSH-C3 SKF BEARING – CAP 80 PULLEY BEARING	2
8	GSP – 00654 – SNAP RING 6X1	2
9	DKS – 00212 – DK 400_600_900 V GUIDE – 400 XL SQUARE GUIDE BEARING SHAFT	2

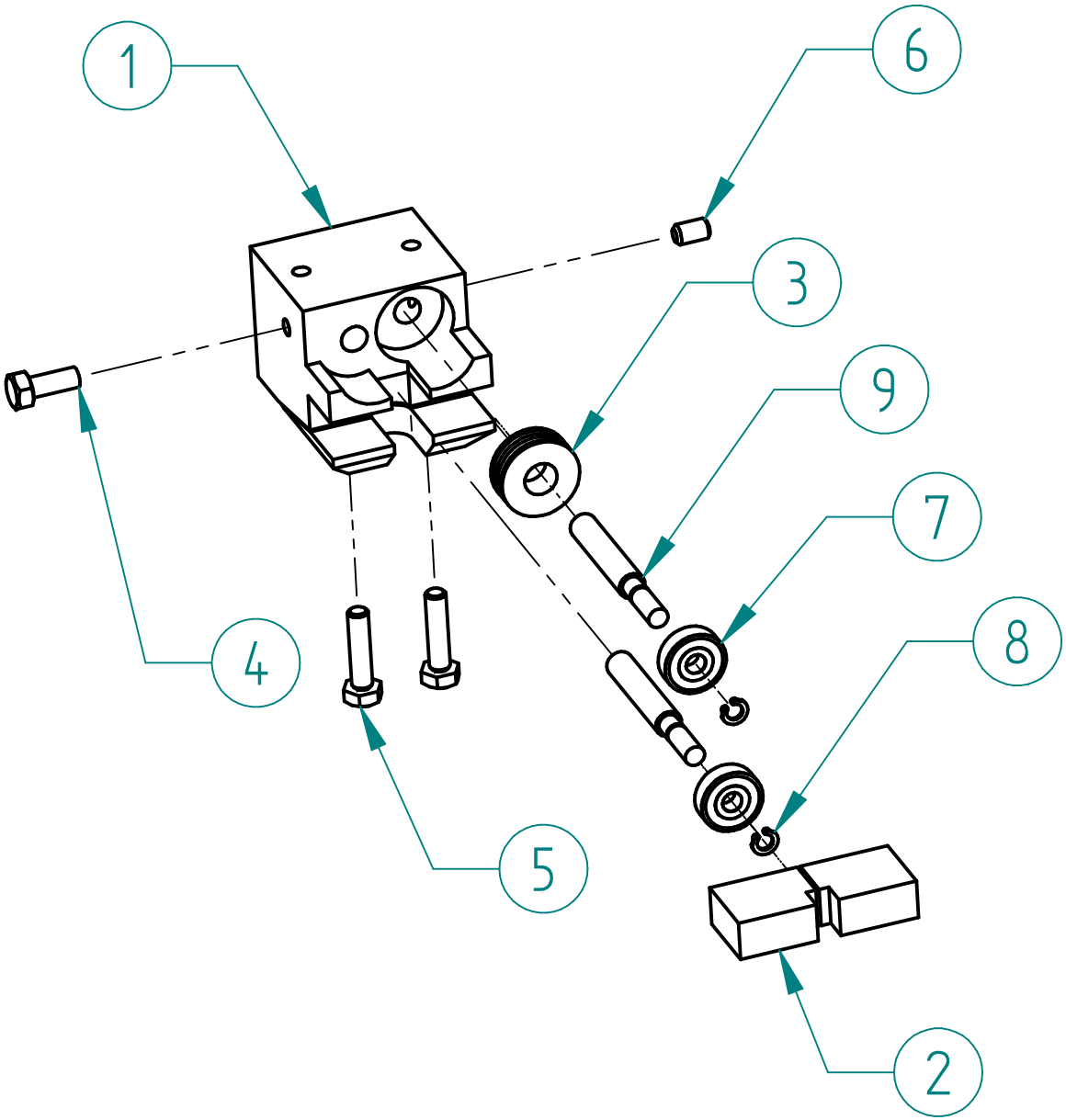

Item Number	File Name (no extension)	Quantity
	DKS – 00216 – DK 400 XL SQUARE GUIDE BLOCK UPPER GROUP 20MM x 27MM	
1	DKS – 00190 – DK 400 XL SQUARE GUIDE UPPER MAIN BLOCK	1
2	DKS – 00068 – SQUARE GUIDE 20MM – 27MM SET	1
3	GSP – 00472 – 51100 SKF LARGE THRUST BALL BEARING – DK 400 XL SQUARE GUIDE BEARING	1
4	GSP – 00124 – M6X15 HEXAGON BOLT	1
5	GSP – 00125 – M6X25 HEXAGON BOLT	2
6	GSP – 00299 – M6X10 SETSCREW	1
7	GSP – 00462 – 626 2RSH-C3 SKF BEARING – CAP 80 PULLEY BEARING	2
8	GSP – 00654 – SNAP RING 6X1	2
9	DKS – 00212 – DK 400_600_900 V GUIDE – 400 XL SQUARE GUIDE BEARING SHAFT	2

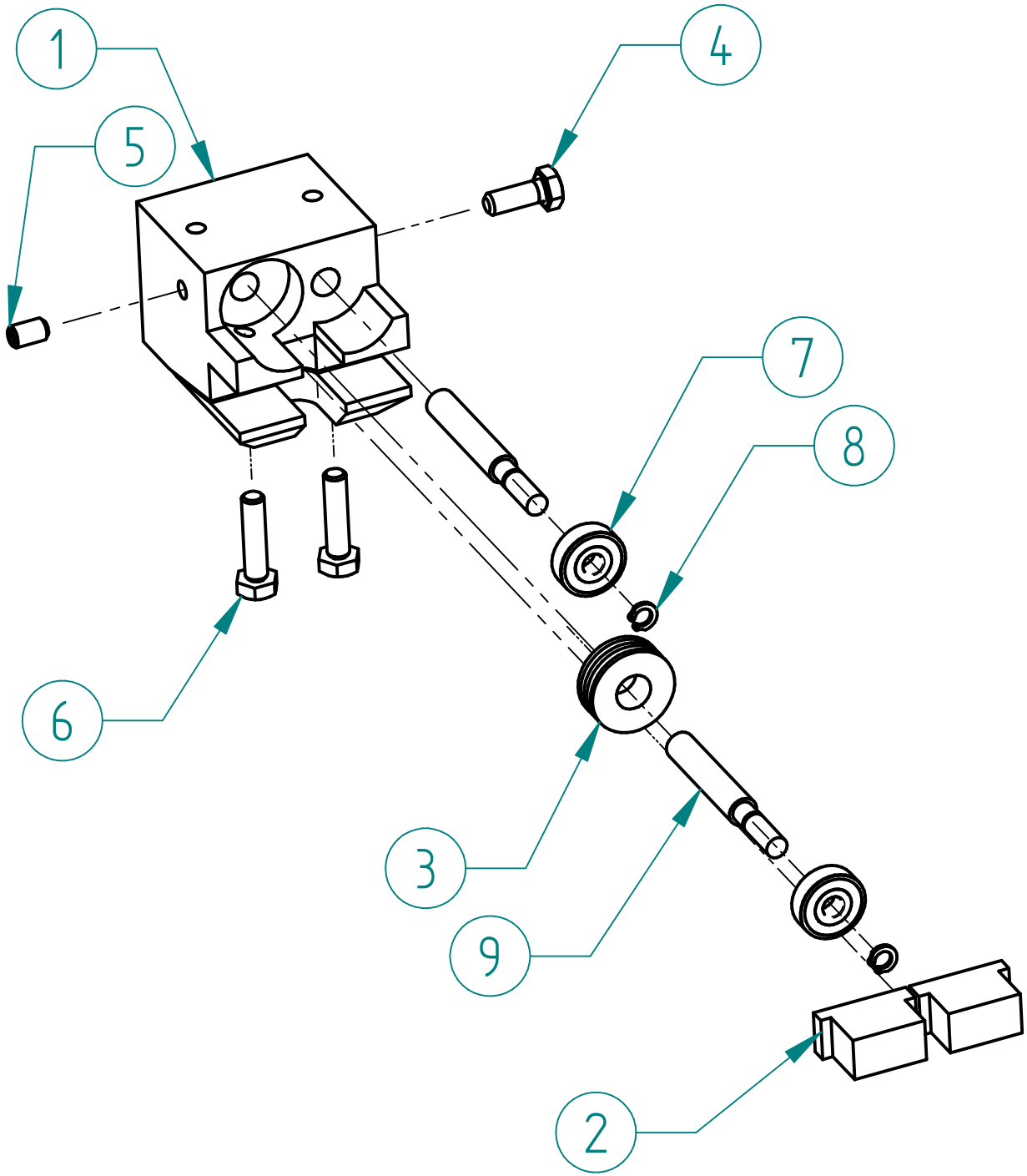

Item	File Name (no extension)	Quantity
	DKS – 00503 – DK 400 XL SQUARE GUIDE BLOCK LOWER GROUP 6MM – 8MM	
1	DKS – 00213 – DK 400 XL SQUARE GUIDE LOWER MAIN BLOCK	1
2	DKS – 00056 – SQUARE GUIDE 6MM – 8MM SET	1
3	GSP – 00472 – 51100 SKF LARGE THRUST BALL BEARING – DK 400 XL SQUARE GUIDE BEARING	1
4	GSP – 00138 – M6x16 HEXAGON BOLT	1
5	GSP – 00299 – M6X10 SETSCREW	1
6	GSP – 00125 – M6X25 HEXAGON BOLT	2
7	GSP – 00462 – 626 2RSH-C3 SKF BEARING – CAP 80 PULLEY BEARING	2
8	GSP – 00654 – SNAP RING 6X1	2
9	DKS – 00212 – DK 400_600_900 V GUIDE – 400 XL SQUARE GUIDE BEARING SHAFT	2

Item	File Name (no extension)	Quantity
	DKS - 00232 - DK 400 XL HYDRAULIC MOTION TABLE PISTON	
1	DKS - 00138 - DK 400 XL T-SLOT TABLE PISTON PIPE	1
2	DKS - 00421 - DK 400 XL T-SLOT TABLE PISTON WELDED SHAFT	1
3	GSP - 00509 - KASTAS-K18-40X26X15_5 - DK 400 T-SLOT TABLE PISTON	1

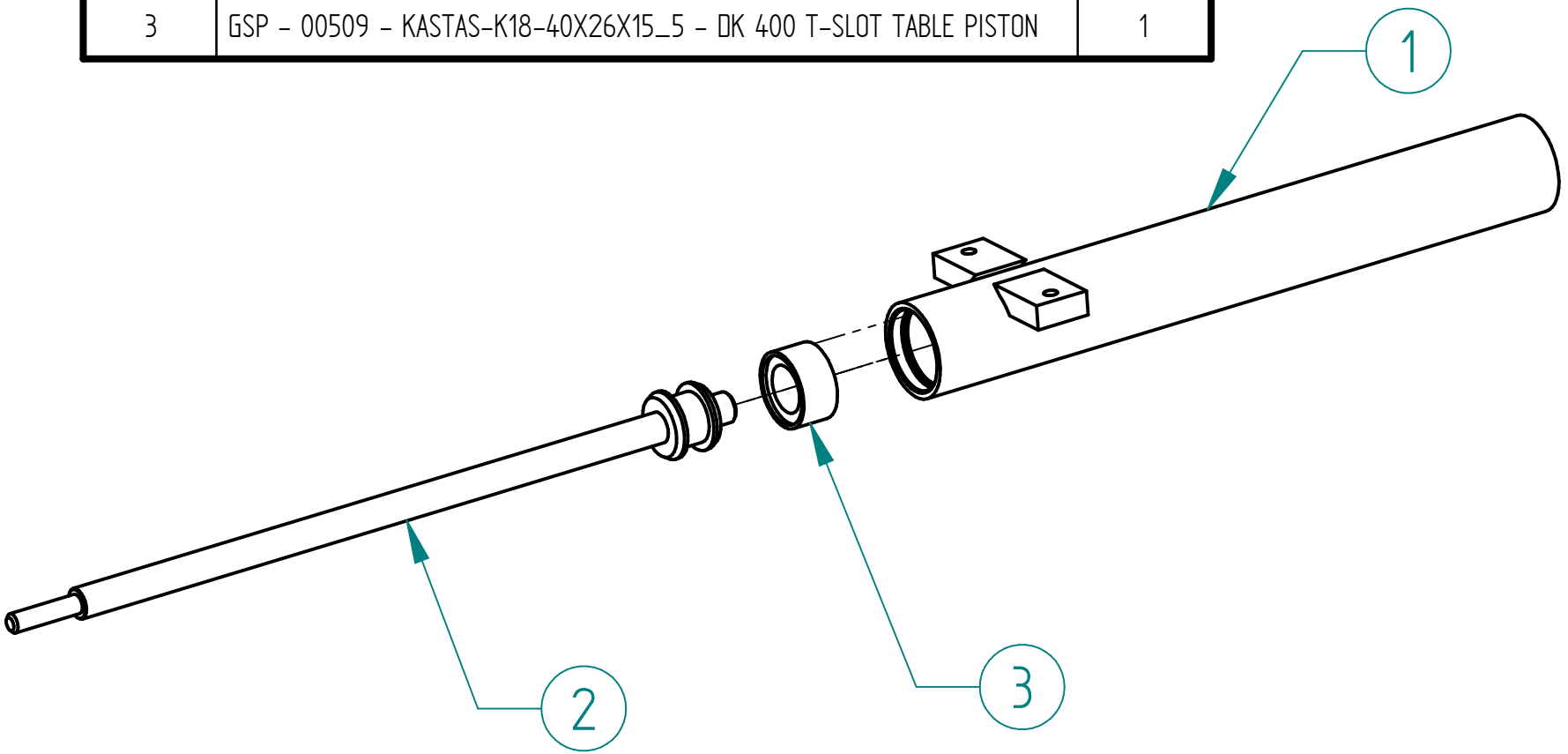

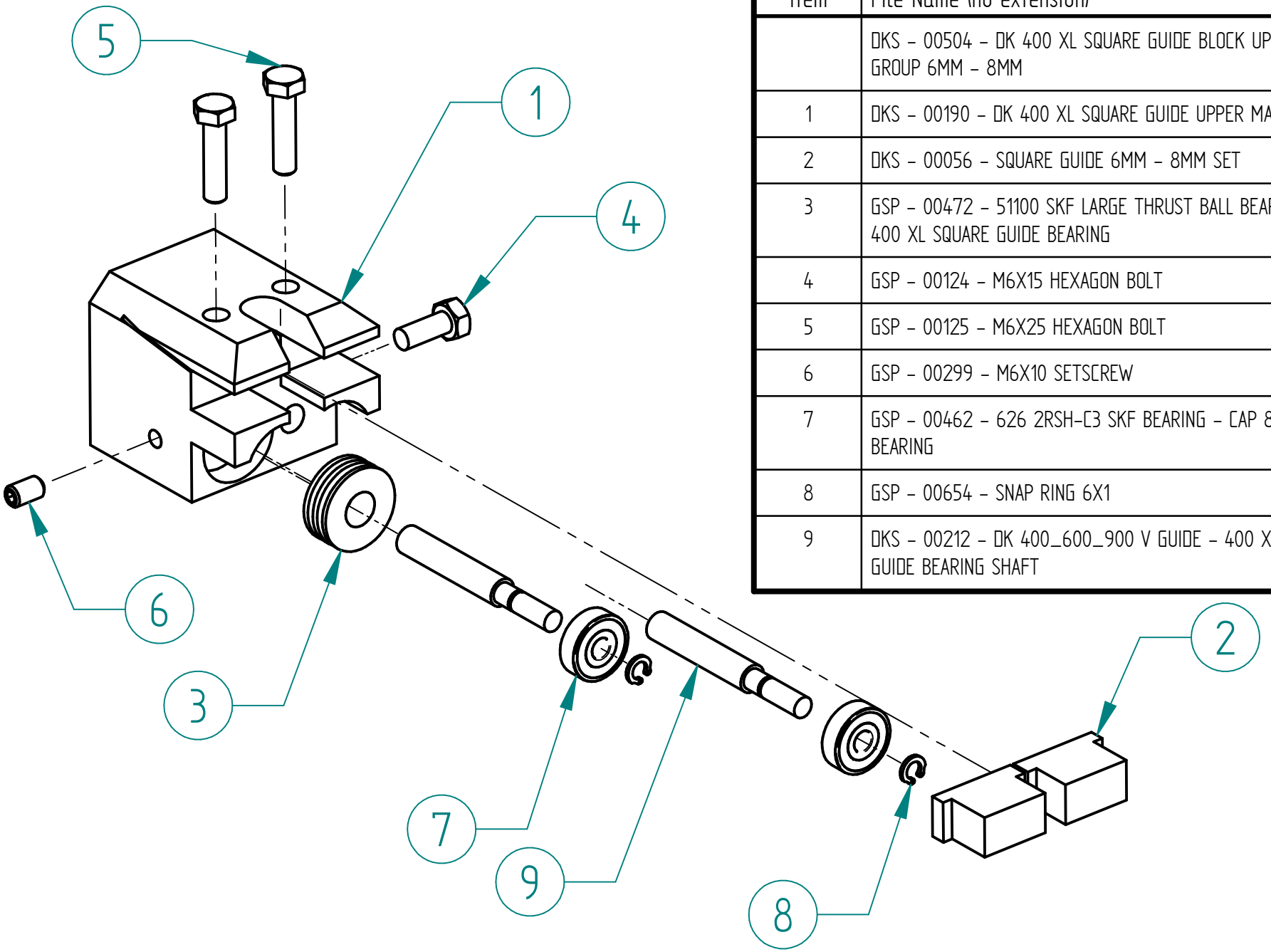

Item	File Name (no extension)	Quantity
	DKS – 00504 – DK 400 XL SQUARE GUIDE BLOCK UPPER GROUP 6MM – 8MM	
1	DKS – 00190 – DK 400 XL SQUARE GUIDE UPPER MAIN BLOCK	1
2	DKS – 00056 – SQUARE GUIDE 6MM – 8MM SET	1
3	GSP – 00472 – 51100 SKF LARGE THRUST BALL BEARING – DK 400 XL SQUARE GUIDE BEARING	1
4	GSP – 00124 – M6X15 HEXAGON BOLT	1
5	GSP – 00125 – M6X25 HEXAGON BOLT	2
6	GSP – 00299 – M6X10 SETSCREW	1
7	GSP – 00462 – 626 2RSH-C3 SKF BEARING – CAP 80 PULLEY BEARING	2
8	GSP – 00654 – SNAP RING 6X1	2
9	DKS – 00212 – DK 400_600_900 V GUIDE – 400 XL SQUARE GUIDE BEARING SHAFT	2

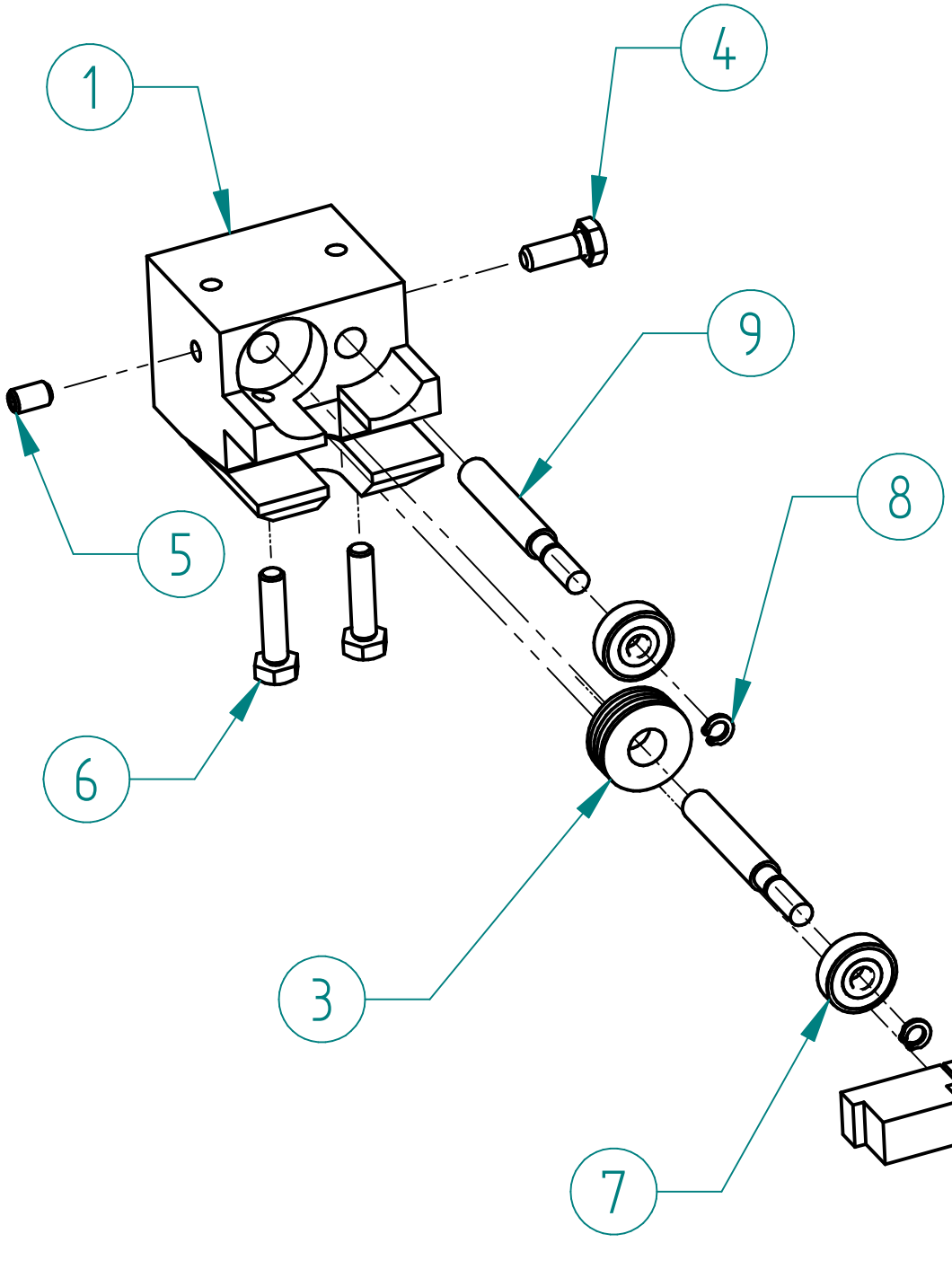

Item	File Name (no extension)	Quantity
	DKS – 00505 – DK 400 XL SQUARE GUIDE BLOCK LOWER GROUP 10MM – 13MM	
1	DKS – 00213 – DK 400 XL SQUARE GUIDE LOWER MAIN BLOCK	1
2	DKS – 00065 – SQUARE GUIDE 10MM – 13MM SET	1
3	GSP – 00472 – 51100 SKF LARGE THRUST BALL BEARING – DK 400 XL SQUARE GUIDE BEARING	1
4	GSP – 00138 – M6x16 HEXAGON BOLT	1
5	GSP – 00299 – M6X10 SETSCREW	1
6	GSP – 00125 – M6X25 HEXAGON BOLT	2
7	GSP – 00462 – 626 2RSH-C3 SKF BEARING – CAP 80 PULLEY BEARING	2
8	GSP – 00654 – SNAP RING 6X1	2
9	DKS – 00212 – DK 400_600_900 V GUIDE – 400 XL SQUARE GUIDE BEARING SHAFT	2

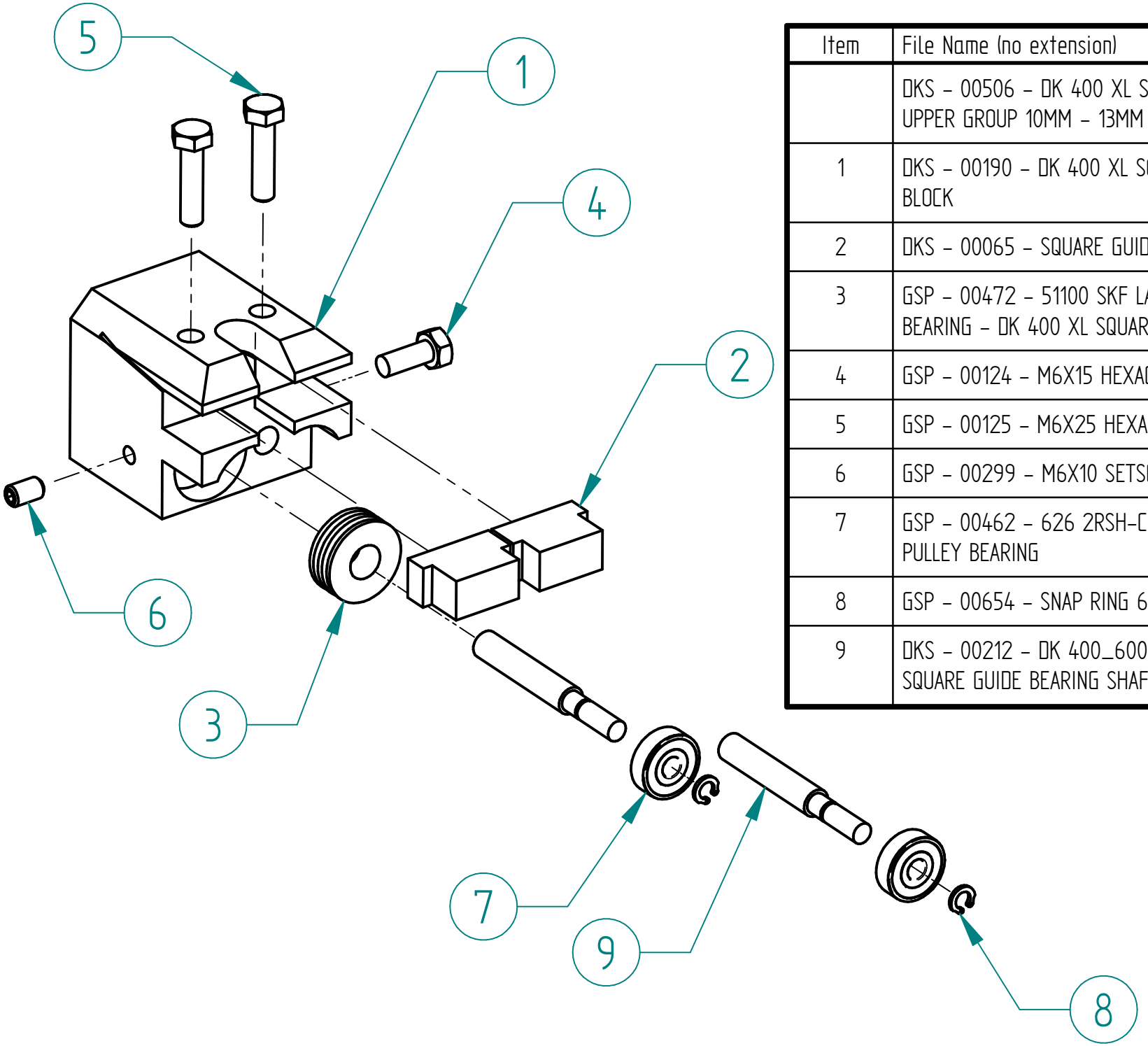

Item	File Name (no extension)	Quantity
	DKS – 00506 – DK 400 XL SQUARE GUIDE BLOCK UPPER GROUP 10MM – 13MM	
1	DKS – 00190 – DK 400 XL SQUARE GUIDE UPPER MAIN BLOCK	1
2	DKS – 00065 – SQUARE GUIDE 10MM – 13MM SET	1
3	GSP – 00472 – 51100 SKF LARGE THRUST BALL BEARING – DK 400 XL SQUARE GUIDE BEARING	1
4	GSP – 00124 – M6X15 HEXAGON BOLT	1
5	GSP – 00125 – M6X25 HEXAGON BOLT	2
6	GSP – 00299 – M6X10 SETSCREW	1
7	GSP – 00462 – 626 2RSH-C3 SKF BEARING – CAP 80 PULLEY BEARING	2
8	GSP – 00654 – SNAP RING 6X1	2
9	DKS – 00212 – DK 400_600_900 V GUIDE – 400 XL SQUARE GUIDE BEARING SHAFT	2

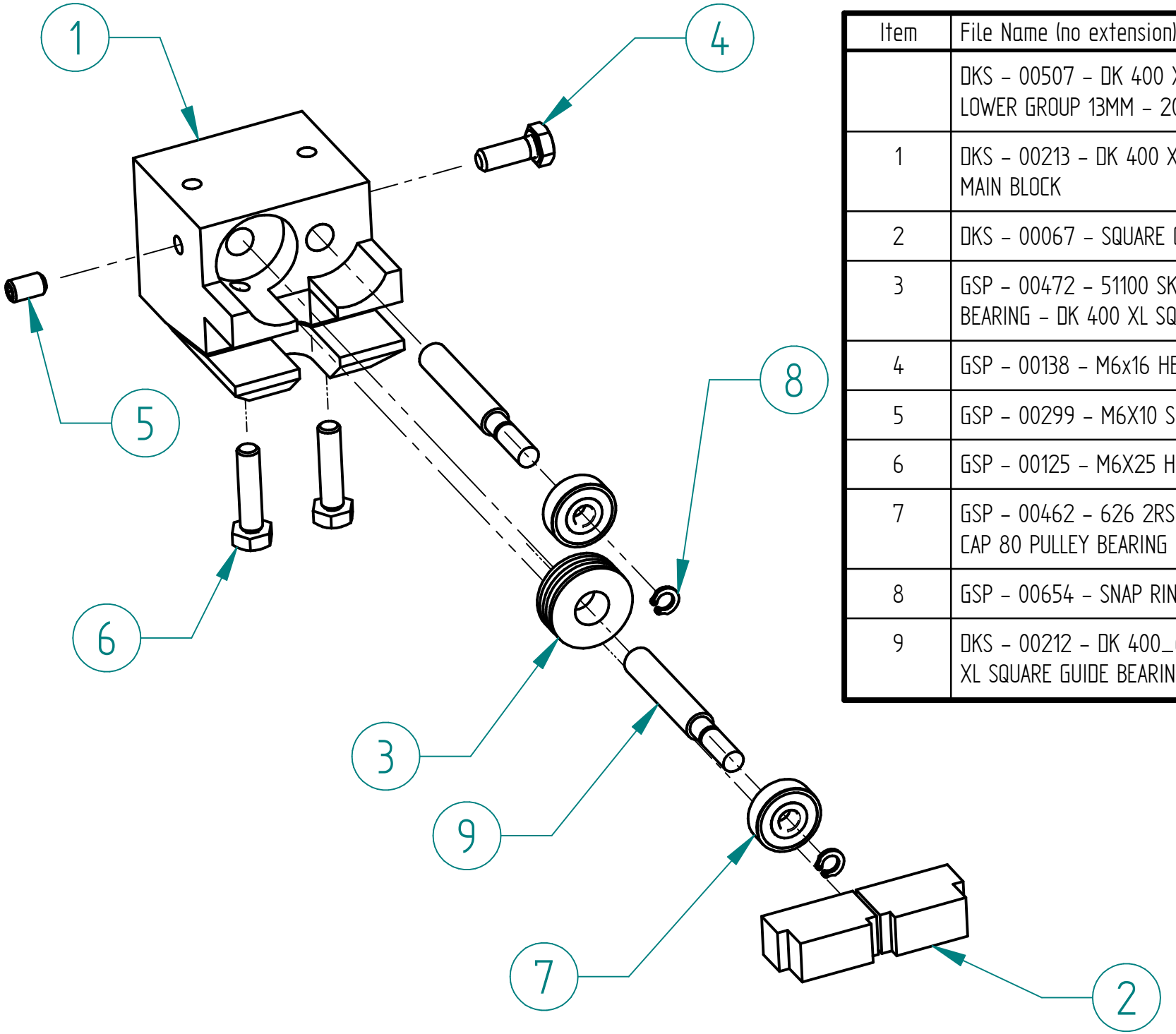

Item	File Name (no extension)	Quantity
	DKS – 00507 – DK 400 XL SQUARE GUIDE BLOCK LOWER GROUP 13MM – 20MM	
1	DKS – 00213 – DK 400 XL SQUARE GUIDE LOWER MAIN BLOCK	1
2	DKS – 00067 – SQUARE GUIDE 13MM – 20MM SET	1
3	GSP – 00472 – 51100 SKF LARGE THRUST BALL BEARING – DK 400 XL SQUARE GUIDE BEARING	1
4	GSP – 00138 – M6x16 HEXAGON BOLT	1
5	GSP – 00299 – M6X10 SETSCREW	1
6	GSP – 00125 – M6X25 HEXAGON BOLT	2
7	GSP – 00462 – 626 2RSH-C3 SKF BEARING – CAP 80 PULLEY BEARING	2
8	GSP – 00654 – SNAP RING 6X1	2
9	DKS – 00212 – DK 400_600_900 V GUIDE – 400 XL SQUARE GUIDE BEARING SHAFT	2

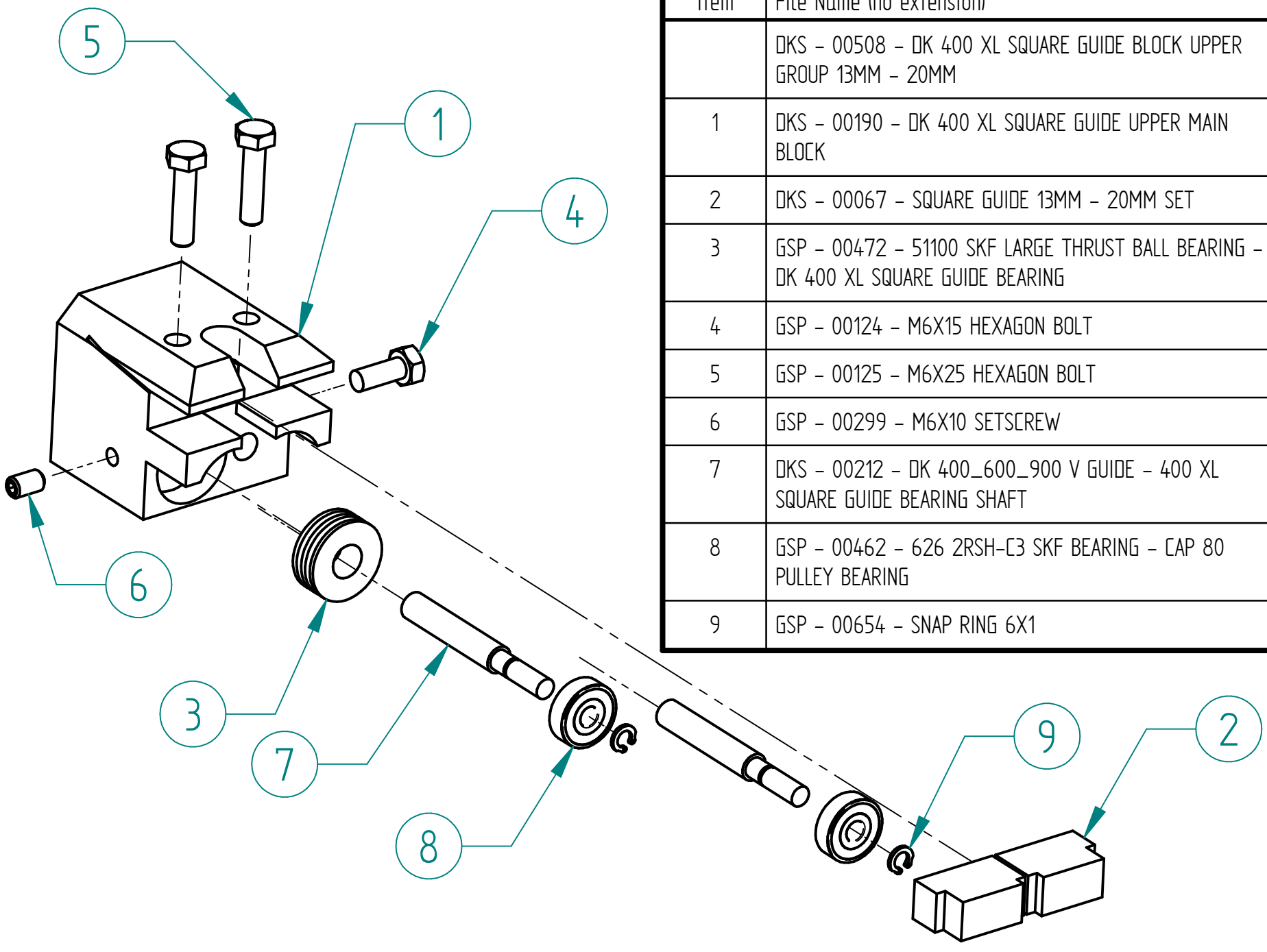

Item	File Name (no extension)	Quantity
	DKS – 00508 – DK 400 XL SQUARE GUIDE BLOCK UPPER GROUP 13MM – 20MM	
1	DKS – 00190 – DK 400 XL SQUARE GUIDE UPPER MAIN BLOCK	1
2	DKS – 00067 – SQUARE GUIDE 13MM – 20MM SET	1
3	GSP – 00472 – 51100 SKF LARGE THRUST BALL BEARING – DK 400 XL SQUARE GUIDE BEARING	1
4	GSP – 00124 – M6X15 HEXAGON BOLT	1
5	GSP – 00125 – M6X25 HEXAGON BOLT	2
6	GSP – 00299 – M6X10 SETSCREW	1
7	DKS – 00212 – DK 400_600_900 V GUIDE – 400 XL SQUARE GUIDE BEARING SHAFT	2
8	GSP – 00462 – 626 2RSH-C3 SKF BEARING – CAP 80 PULLEY BEARING	2
9	GSP – 00654 – SNAP RING 6X1	2

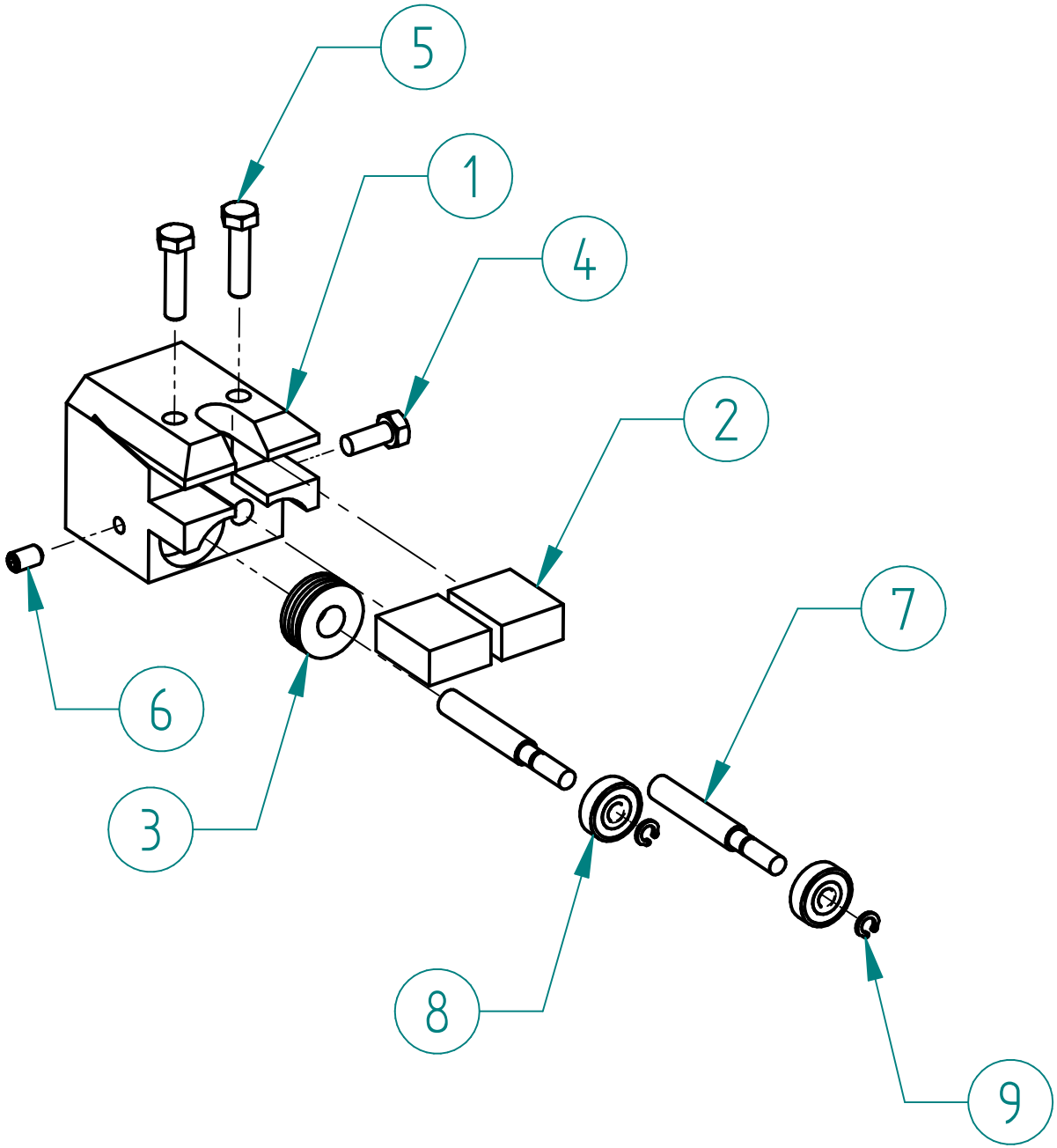

Item	File Name (no extension)	Quantity
	DKS – 00570 – DK 400 XL SQUARE GUIDE BLOCK UPPER GROUP 27MM	
1	DKS – 00190 – DK 400 XL SQUARE GUIDE UPPER MAIN BLOCK	1
2	DKS – 00070 – SQUARE GUIDE 27MM SET	1
3	GSP – 00472 – 51100 SKF LARGE THRUST BALL BEARING – DK 400 XL SQUARE GUIDE BEARING	1
4	GSP – 00124 – M6X15 HEXAGON BOLT	1
5	GSP – 00125 – M6X25 HEXAGON BOLT	2
6	GSP – 00299 – M6X10 SETSCREW	1
7	DKS – 00212 – DK 400_600_900 V GUIDE – 400 XL SQUARE GUIDE BEARING SHAFT	2
8	GSP – 00462 – 626 2RSH-C3 SKF BEARING – CAP 80 PULLEY BEARING	2
9	GSP – 00654 – SNAP RING 6X1	2

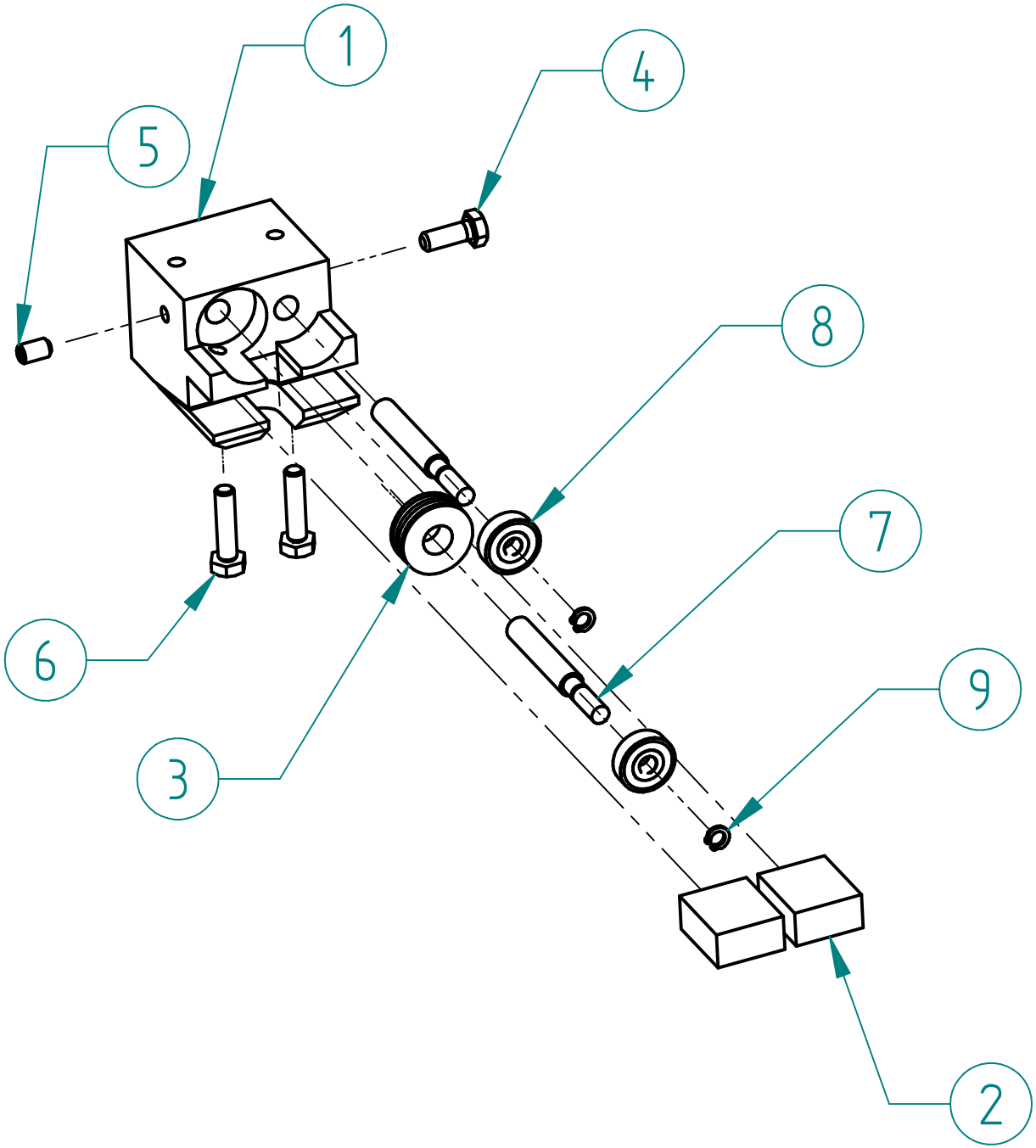

Item	File Name (no extension)	Quantity
	DKS – 00569 – DK 400 XL SQUARE GUIDE BLOCK LOWER GROUP 27MM	
1	DKS – 00213 – DK 400 XL SQUARE GUIDE LOWER MAIN BLOCK	1
2	DKS – 00070 – SQUARE GUIDE 27MM SET	1
3	GSP – 00472 – 51100 SKF LARGE THRUST BALL BEARING – DK 400 XL SQUARE GUIDE BEARING	1
4	GSP – 00138 – M6x16 HEXAGON BOLT	1
5	GSP – 00299 – M6X10 SETSCREW	1
6	GSP – 00125 – M6X25 HEXAGON BOLT	2
7	DKS – 00212 – DK 400_600_900 V GUIDE – 400 XL SQUARE GUIDE BEARING SHAFT	2
8	GSP – 00462 – 626 2RSH-C3 SKF BEARING – CAP 80 PULLEY BEARING	2
9	GSP – 00654 – SNAP RING 6X1	2

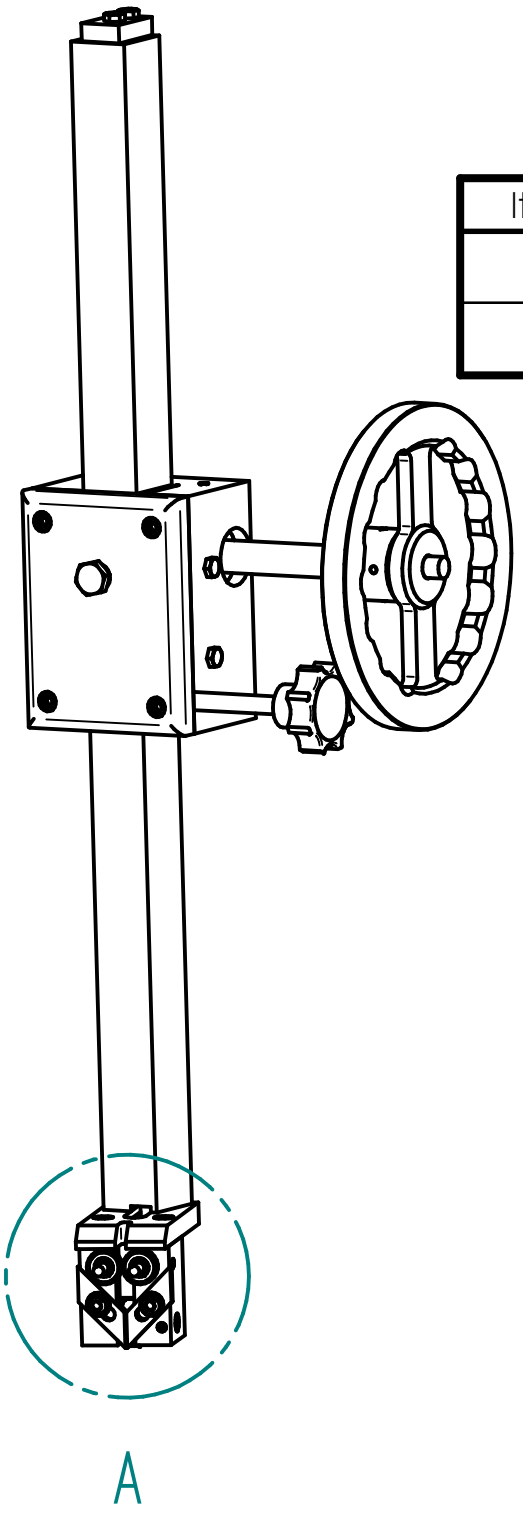

Item	File Name (no extension)	Quantity
1	DKS - 00526 - DK COUNTER V GUIDE 6MM - 10MM GROUP	1
2	DKS - 00191 - DK 400 XL SQUARE - V GUIDE UPPER ASSEMBLY LIM	1

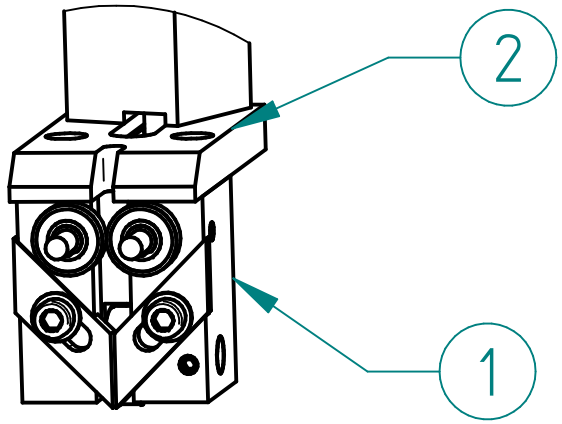

DETAIL A

Item	File Name (no extension)	Quantity
	DKS - 00527 - DK COUNTER V GUIDE 10MM - 13MM GROUP	
1	DKS - 00074 - DK V GUIDE BASE	1
2	GSP - 00458 - 6000-C-2HRS FAG - KN 41_54 HBC FRONT COVER SIDES BEARING	1
3	DKS - 00657 - V GUIDE 10MM - 13MM SET	1
4	DKS - 00212 - DK 400_600_900 V GUIDE - 400 XL SQUARE GUIDE BEARING SHAFT	2
5	GSP - 00462 - 626 2RSH-C3 SKF BEARING - CAP 80 PULLEY BEARING	2
6	GSP - 00408 - STEEL PIN Q10X50	1
7	GSP - 00300 - M6x16 SETSCREW	3
8	GSP - 00274 - M6 WASHER	2
9	GSP - 00024 - M6X25 IMBUS BOLT	2
10	GSP - 00654 - SNAP RING 6X1	2

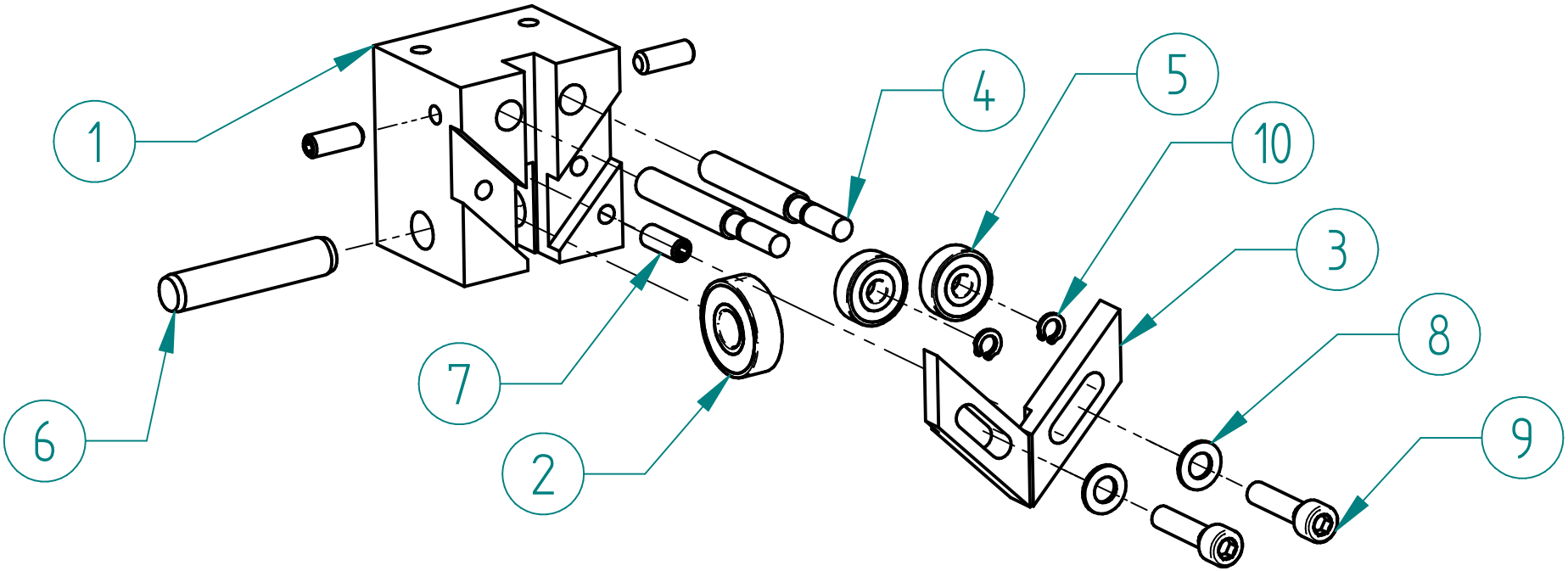

Item	File Name (no extension)	Quantity
	DKS - 00527 - DK COUNTER V GUIDE 10MM - 13MM GROUP	
1	DKS - 00074 - DK V GUIDE BASE	1
2	GSP - 00458 - 6000-C-2HRS FAG - KN 41_54 HBC FRONT COVER SIDES BEARING	1
3	DKS - 00657 - V GUIDE 10MM - 13MM SET	1
4	DKS - 00523 - DK COUNTER V GUIDE BEARING ECCENTRIC SHAFT	2
5	GSP - 00462 - 626 2RSH-C3 SKF BEARING - CAP 80 PULLEY BEARING	2
6	GSP - 00408 - STEEL PIN Q10X50	1
7	GSP - 00300 - M6x16 SETSCREW	3
8	GSP - 00274 - M6 WASHER	2
9	GSP - 00024 - M6X25 IMBUS BOLT	2
10	GSP - 00654 - SNAP RING 6X1	2

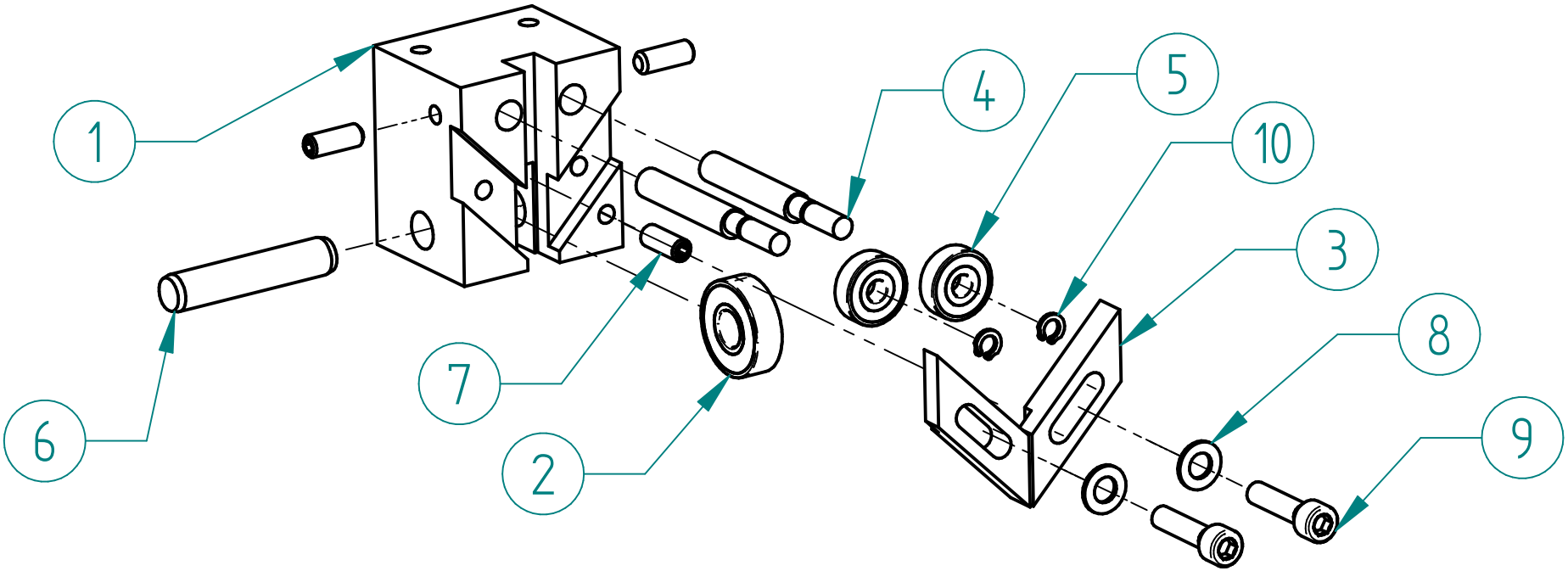

Item	File Name (no extension)	Quantity
	DKS - 00526 - DK COUNTER V GUIDE 6MM - 10MM GROUP	
1	DKS - 00074 - DK V GUIDE BASE	1
2	GSP - 00458 - 6000-C-2HRS FAG - KN 41_54 HBC FRONT COVER SIDES BEARING	1
3	DKS - 00611 - V GUIDE 6MM - 10MM SET	1
4	DKS - 00212 - DK 400_600_900 V GUIDE - 400 XL SQUARE GUIDE BEARING SHAFT	2
5	GSP - 00462 - 626 2RSH-C3 SKF BEARING - CAP 80 PULLEY BEARING	2
6	GSP - 00408 - STEEL PIN Q10X50	1
7	GSP - 00300 - M6x16 SETSCREW	3
8	GSP - 00274 - M6 WASHER	2
9	GSP - 00024 - M6X25 IMBUS BOLT	2
10	GSP - 00654 - SNAP RING 6X1	2

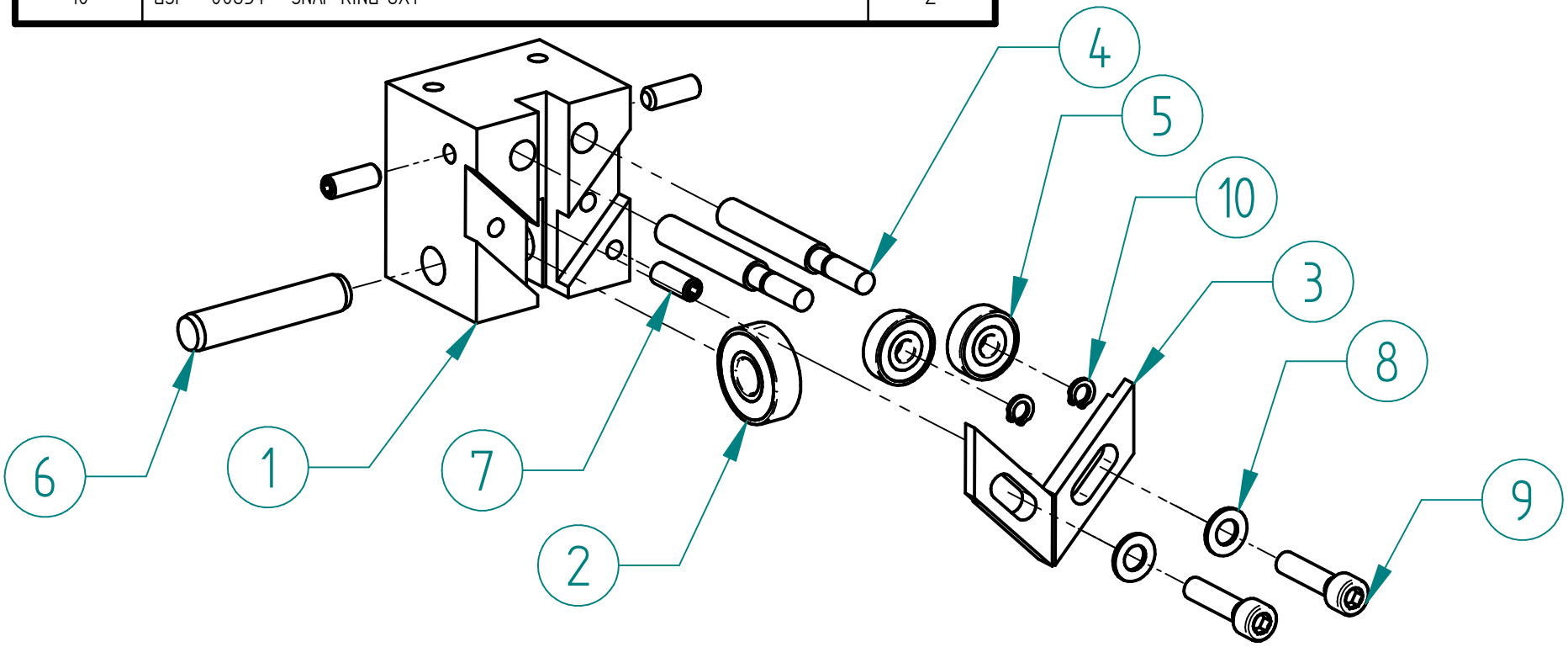

Item	File Name (no extension)	Quantity
	DKS - 00525 - DK COUNTER V GUIDE 20MM GROUP	
1	DKS - 00074 - DK V GUIDE BASE	1
2	DKS - 00093 - V GUIDE 20MM SET	1
3	GSP - 00458 - 6000-C-2HRS FAG - KN 41_54 HBC FRONT COVER SIDES BEARING	1
4	DKS - 00212 - DK 400_600_900 V GUIDE - 400 XL SQUARE GUIDE BEARING SHAFT	2
5	GSP - 00462 - 626 2RSH-C3 SKF BEARING - CAP 80 PULLEY BEARING	2
6	GSP - 00408 - STEEL PIN Q10X50	1
7	GSP - 00300 - M6x16 SETSCREW	3
8	GSP - 00274 - M6 WASHER	2
9	GSP - 00024 - M6X25 IMBUS BOLT	2
10	GSP - 00654 - SNAP RING 6X1	2

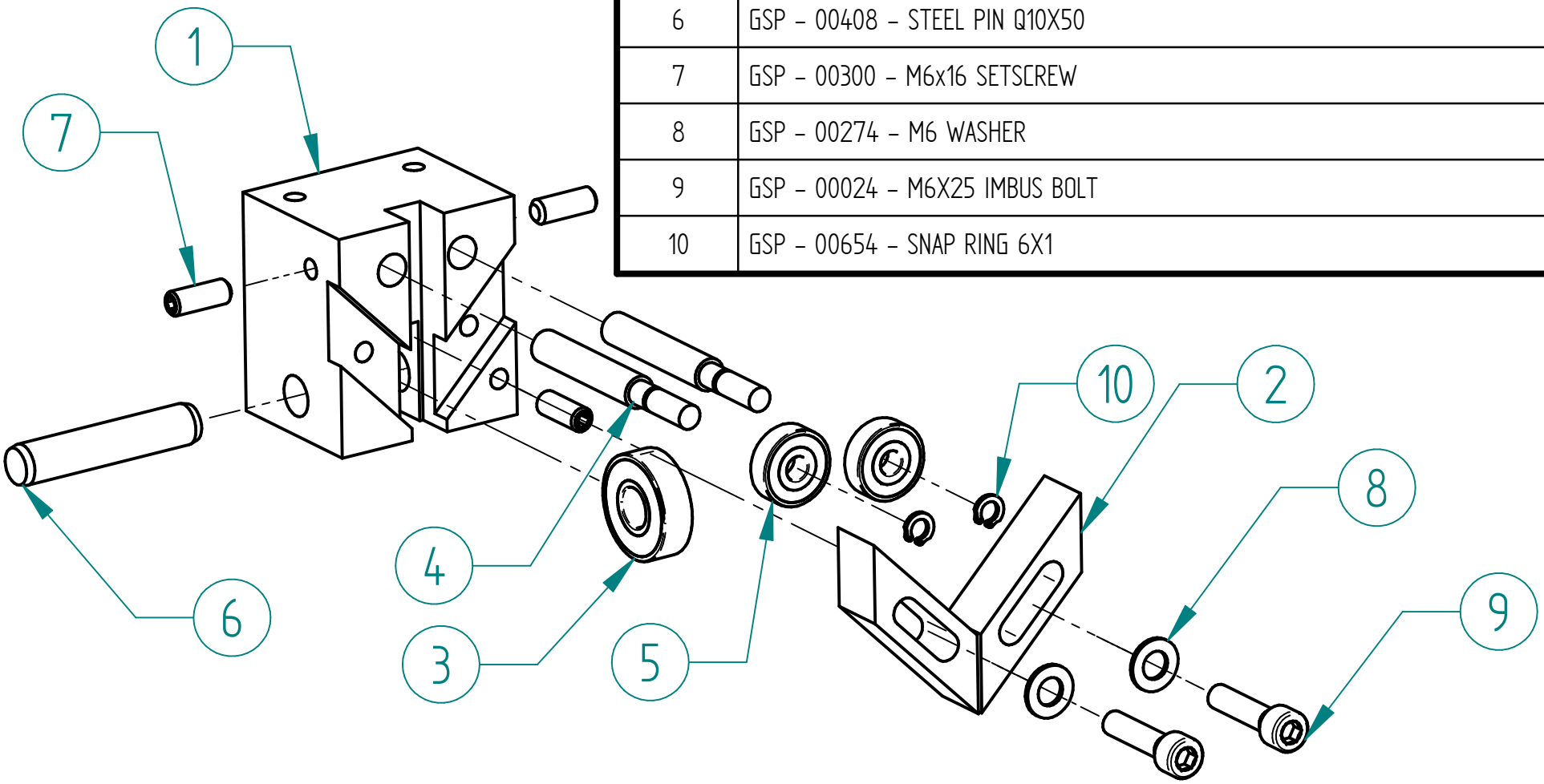

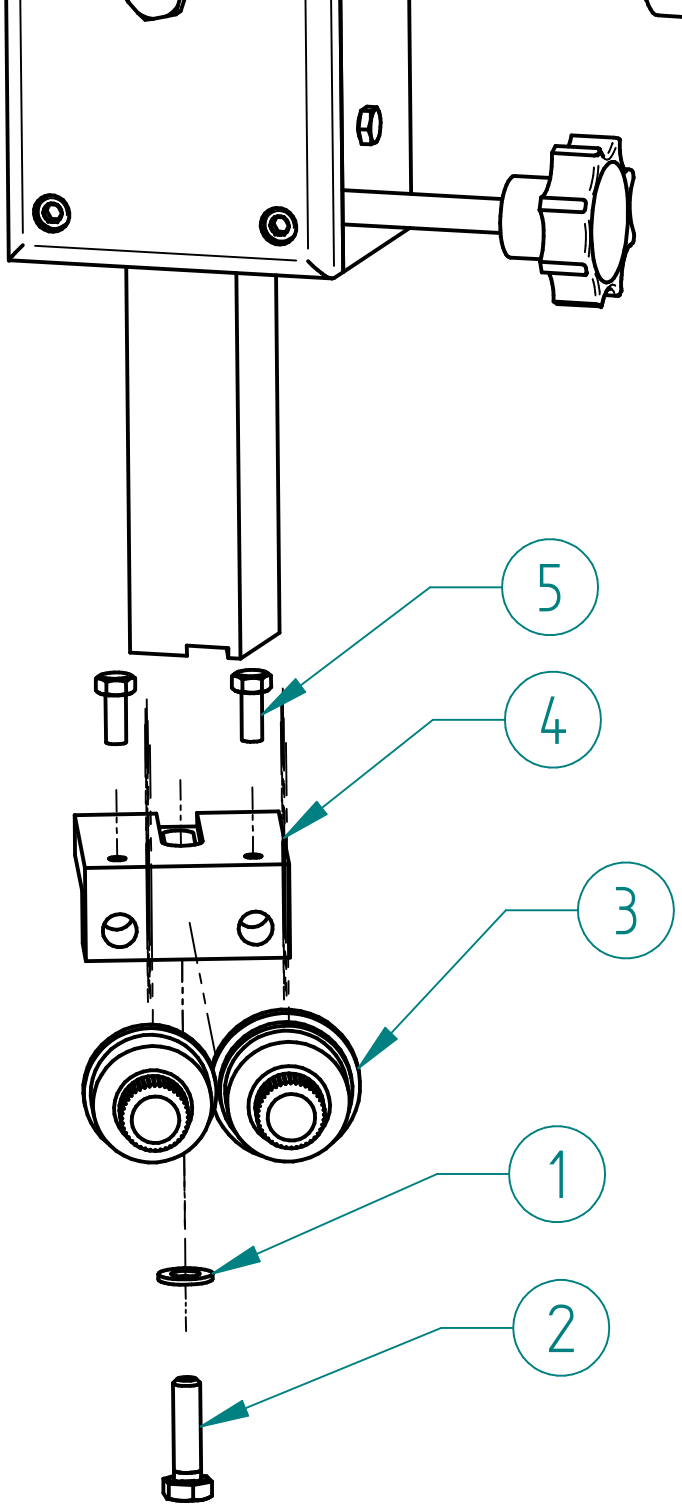

Item	File Name (no extension)	Quantity
1	GSP – 00275 – M8 WASHER	1
2	GSP – 00141 – M8X30 HEXAGON BOLT	1
3	DKS – 00240 – DK COUNTER BEARING GUIDE 8MM SET	1
4	DKS – 00239 – DK 400 XL BEARING GUIDE UPPER ASSEMBLY LIM	1
5	GSP – 00124 – M6X15 HEXAGON BOLT	2

Item	File Name (no extension)	Quantity
	DKS – 00521 – DK COUNTER BEARING GUIDE 10MM SET	
1	DKS – 00518 – BEARING GUIDE 10MM – L	1
2	DKS – 00517 – BEARING GUIDE 10MM – R	1
3	GSP – 00474 – 6001 2Z-C3 SKF BEARING – DK 400 XL BEARING GUIDE'S BEARING	4
4	DKS – 00225 – Q12_1-27_5-9 WASHER – DK COUNTER BEARING GUIDE WASHER	2
5	DKS – 00048 – HS BEARING GUIDE SHAFT RIGHT	1
6	DKS – 00075 – HS BEARING GUIDE SHAFT LEFT	1
7	DKS – 00229 – HS BEARING GUIDE SHAFT NUT RIGHT	1
8	DKS – 00251 – HS BEARING GUIDE SHAFT NUT LEFT	1

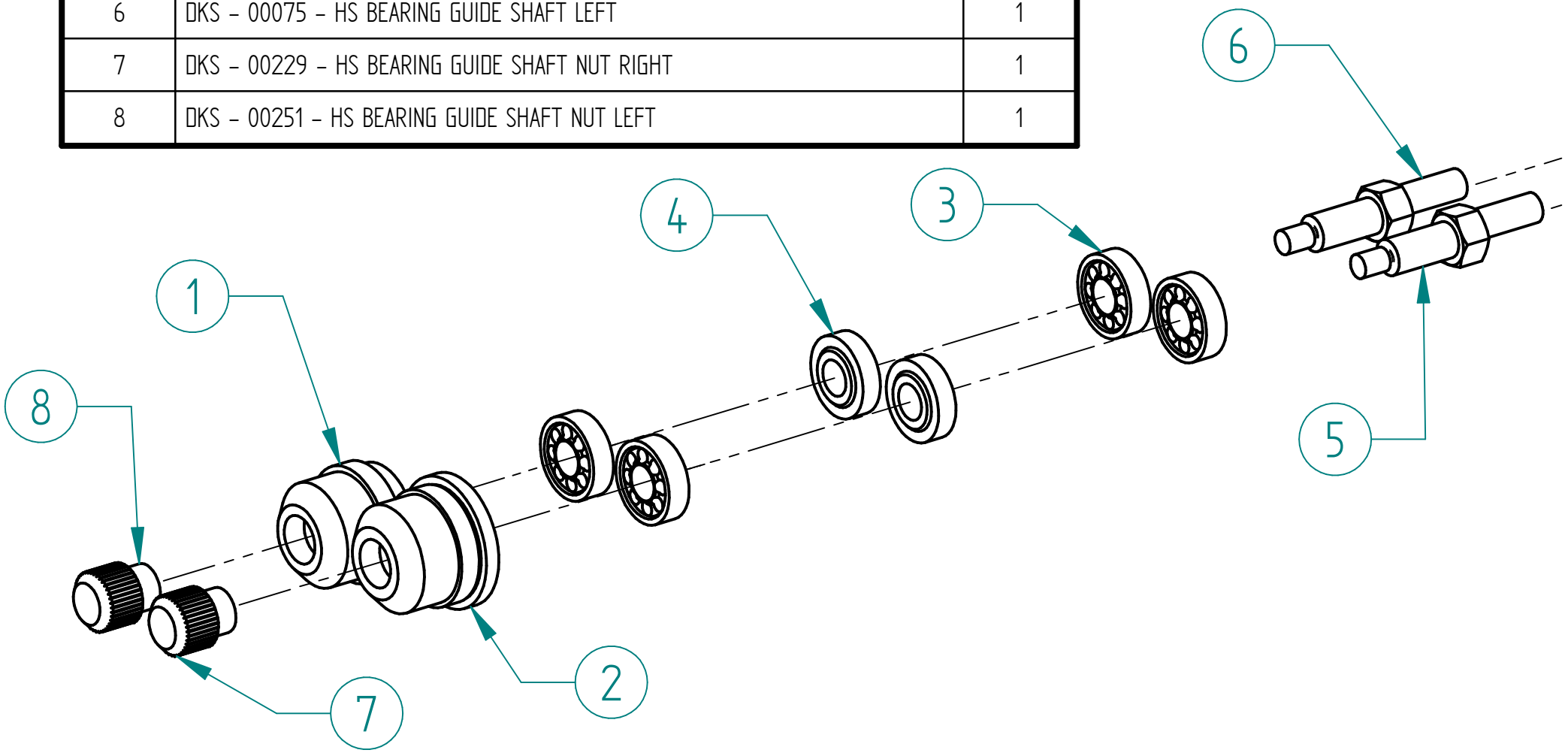

Item	File Name (no extension)	Quantity
	DKS – 00522 – DK COUNTER BEARING GUIDE 20MM SET	
1	DKS – 00519 – BEARING GUIDE 20MM – L	1
2	DKS – 00013 – BEARING GUIDE 20MM – R	1
3	GSP – 00474 – 6001 2Z-C3 SKF BEARING – DK 400 XL BEARING GUIDE'S BEARING	4
4	DKS – 00225 – Q12_1-27_5-9 WASHER – DK COUNTER BEARING GUIDE WASHER	2
5	DKS – 00048 – HS BEARING GUIDE SHAFT RIGHT	1
6	DKS – 00075 – HS BEARING GUIDE SHAFT LEFT	1
7	DKS – 00229 – HS BEARING GUIDE SHAFT NUT RIGHT	1
8	DKS – 00251 – HS BEARING GUIDE SHAFT NUT LEFT	1

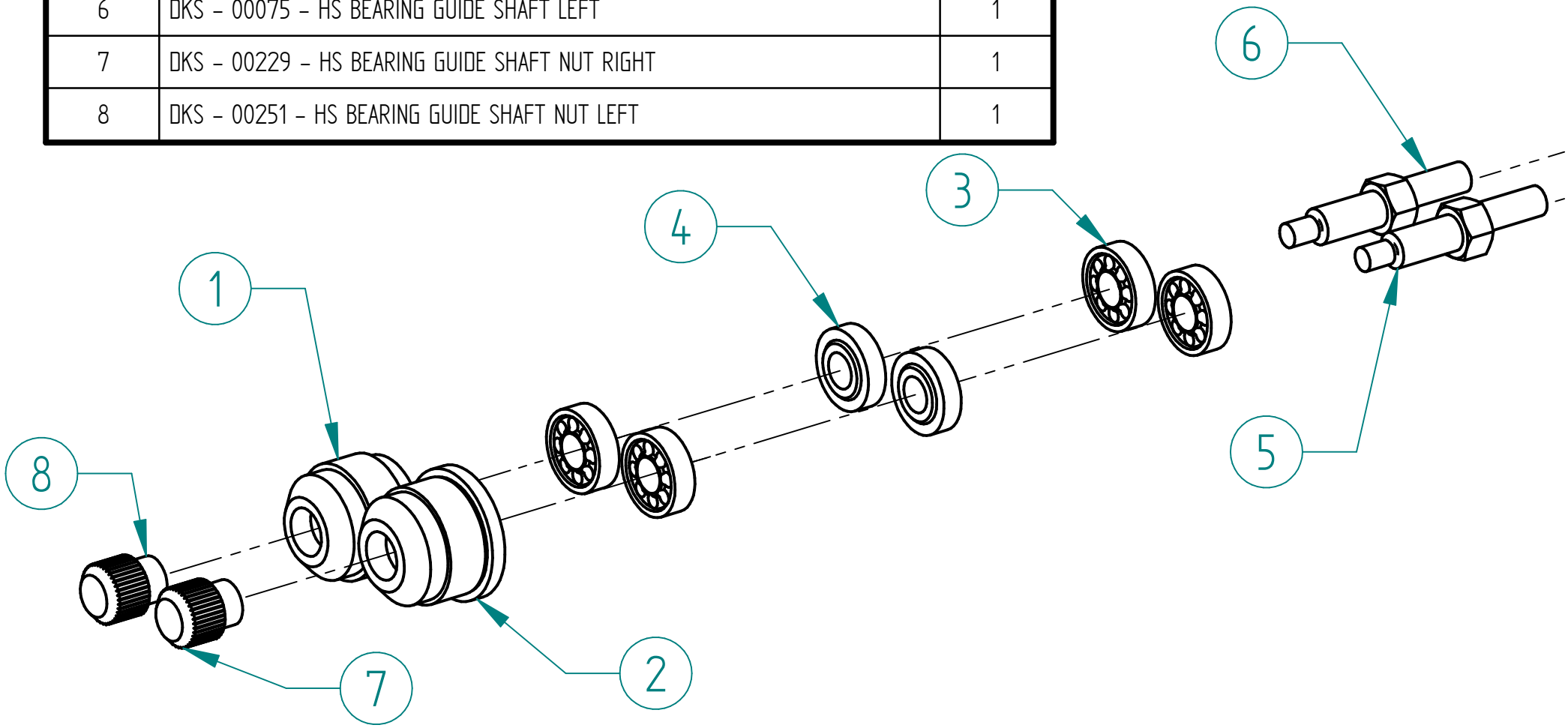

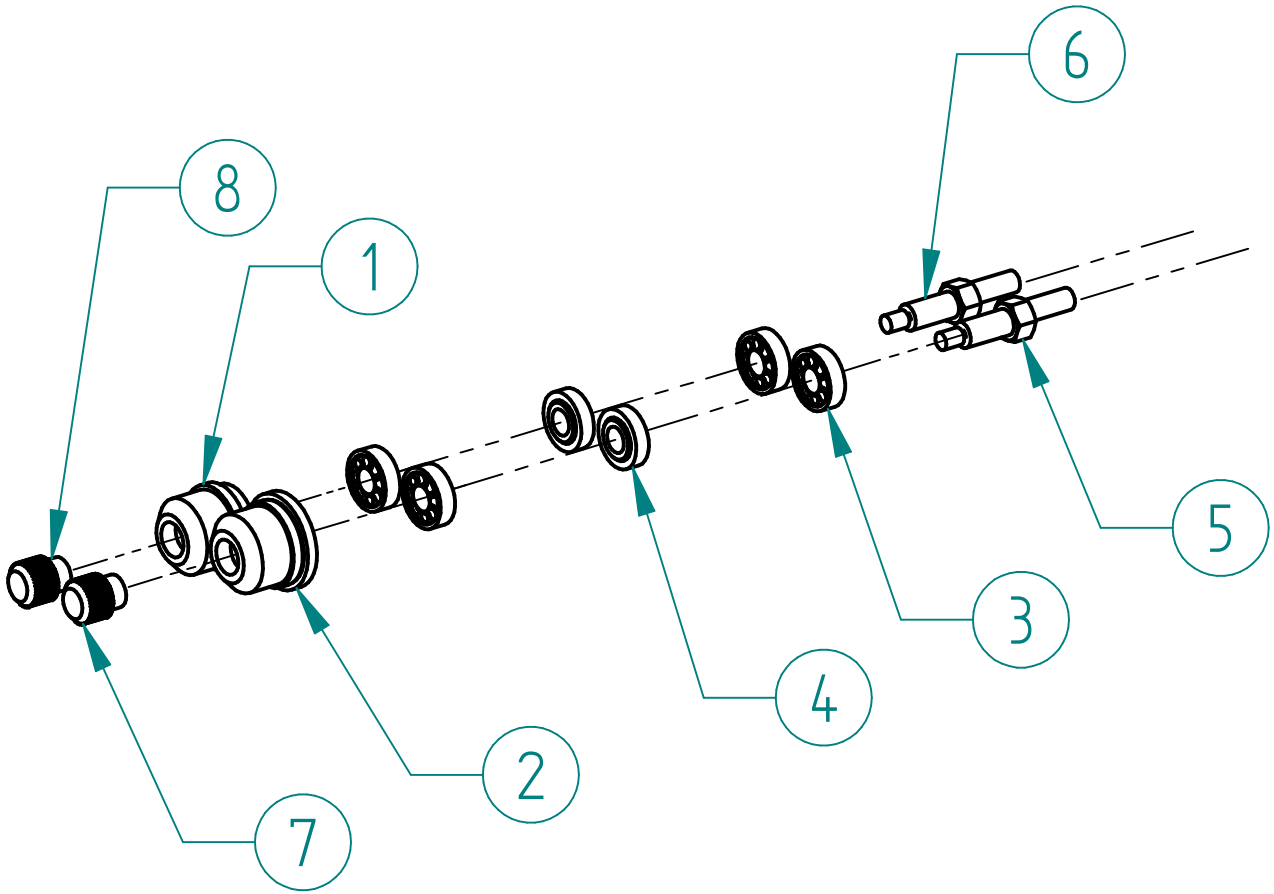

Item	File Name (no extension)	Quantity
	DKS - 00240 - DK COUNTER BEARING GUIDE 8MM SET	
1	DKS - 00228 - BEARING GUIDE 8MM - L	1
2	DKS - 00227 - BEARING GUIDE 8MM - R	1
3	GSP - 00474 - 6001 2Z-C3 SKF BEARING - DK 400 XL BEARING GUIDE'S BEARING	4
4	DKS - 00225 - Q12_1-27_5-9 WASHER - DK COUNTER BEARING GUIDE WASHER	2
5	DKS - 00048 - HS BEARING GUIDE SHAFT RIGHT	1
6	DKS - 00075 - HS BEARING GUIDE SHAFT LEFT	1
7	DKS - 00229 - HS BEARING GUIDE SHAFT NUT RIGHT	1
8	DKS - 00251 - HS BEARING GUIDE SHAFT NUT LEFT	1

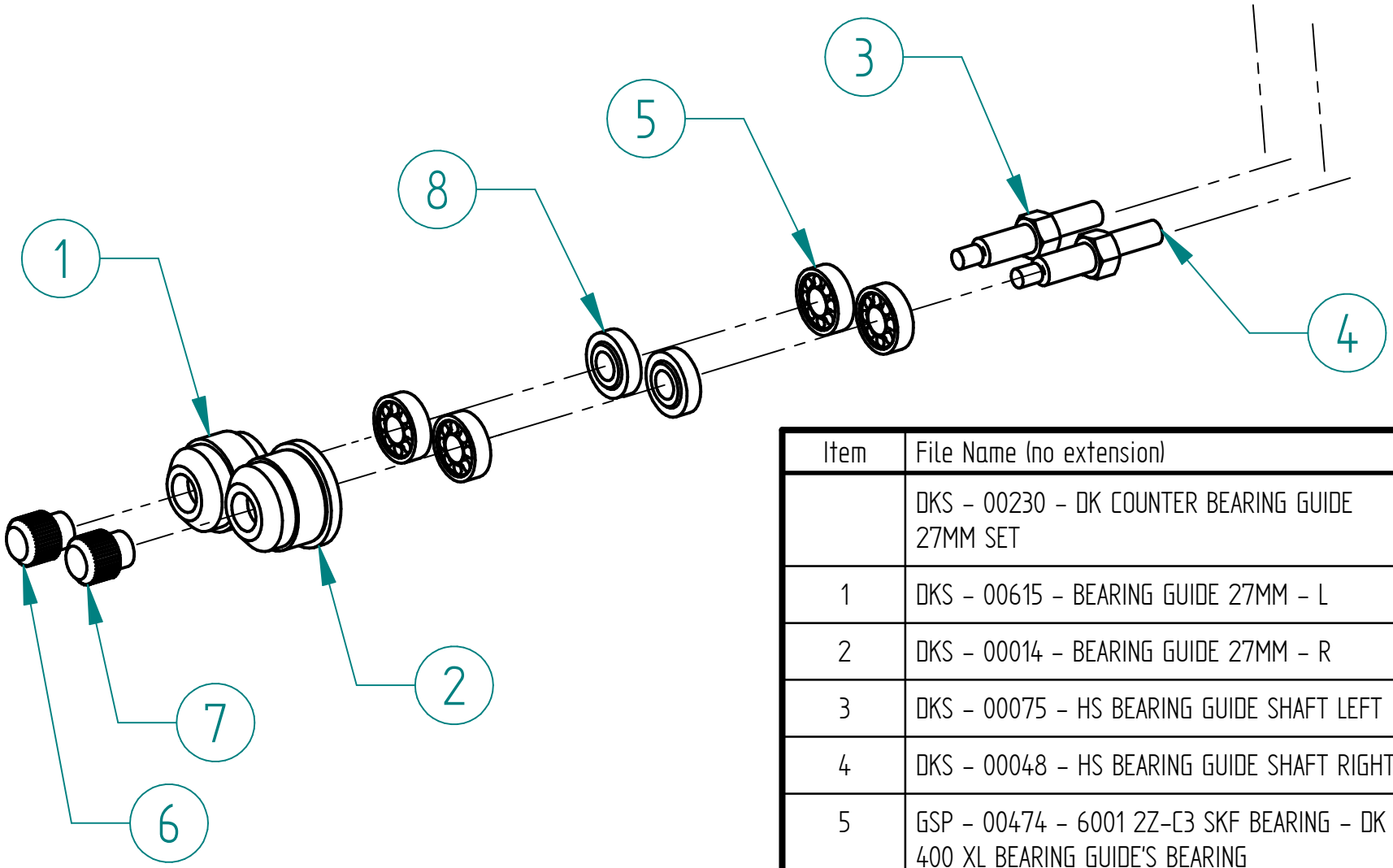

Item	File Name (no extension)	Quantity
	DKS – 00230 – DK COUNTER BEARING GUIDE 27MM SET	
1	DKS – 00615 – BEARING GUIDE 27MM – L	1
2	DKS – 00014 – BEARING GUIDE 27MM – R	1
3	DKS – 00075 – HS BEARING GUIDE SHAFT LEFT	1
4	DKS – 00048 – HS BEARING GUIDE SHAFT RIGHT	1
5	GSP – 00474 – 6001 2Z-C3 SKF BEARING – DK 400 XL BEARING GUIDE'S BEARING	4
6	DKS – 00251 – HS BEARING GUIDE SHAFT NUT LEFT	1
7	DKS – 00229 – HS BEARING GUIDE SHAFT NUT RIGHT	1
8	DKS – 00225 – Q12_1-27_5-9 WASHER – DK COUNTER BEARING GUIDE WASHER	2

SEMI AUTO
WELDING OPERATION
GROUP

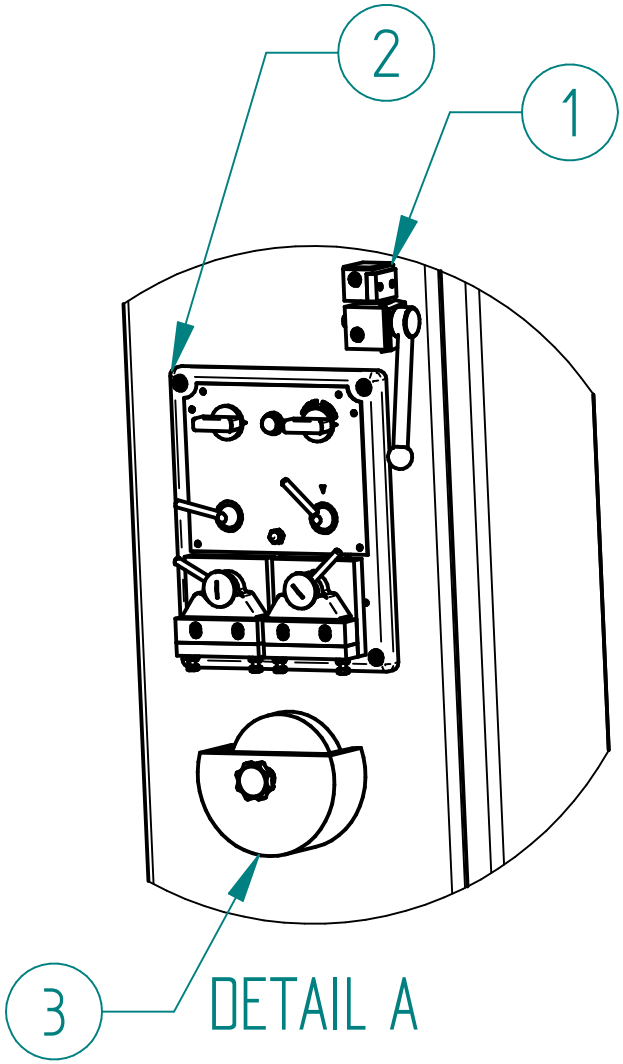

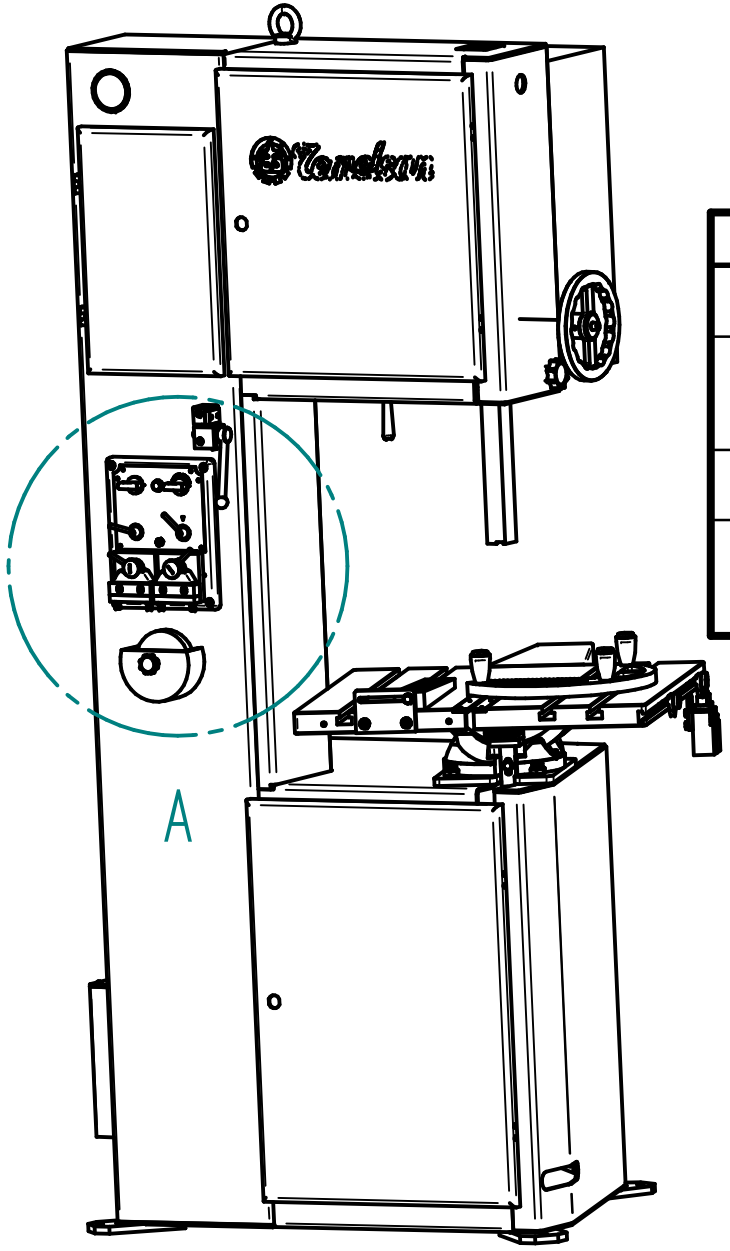

Item	File Name (no extension)	Quantity
	DK 400 XL	
1	DKO - SAWL - DK COUNTER TYPE SHEAR CUTTER	1
2	DKO - SAWL - KN02MD	1
3	DKO - SAWL - DK COUNTER TYPE GRINDER	1

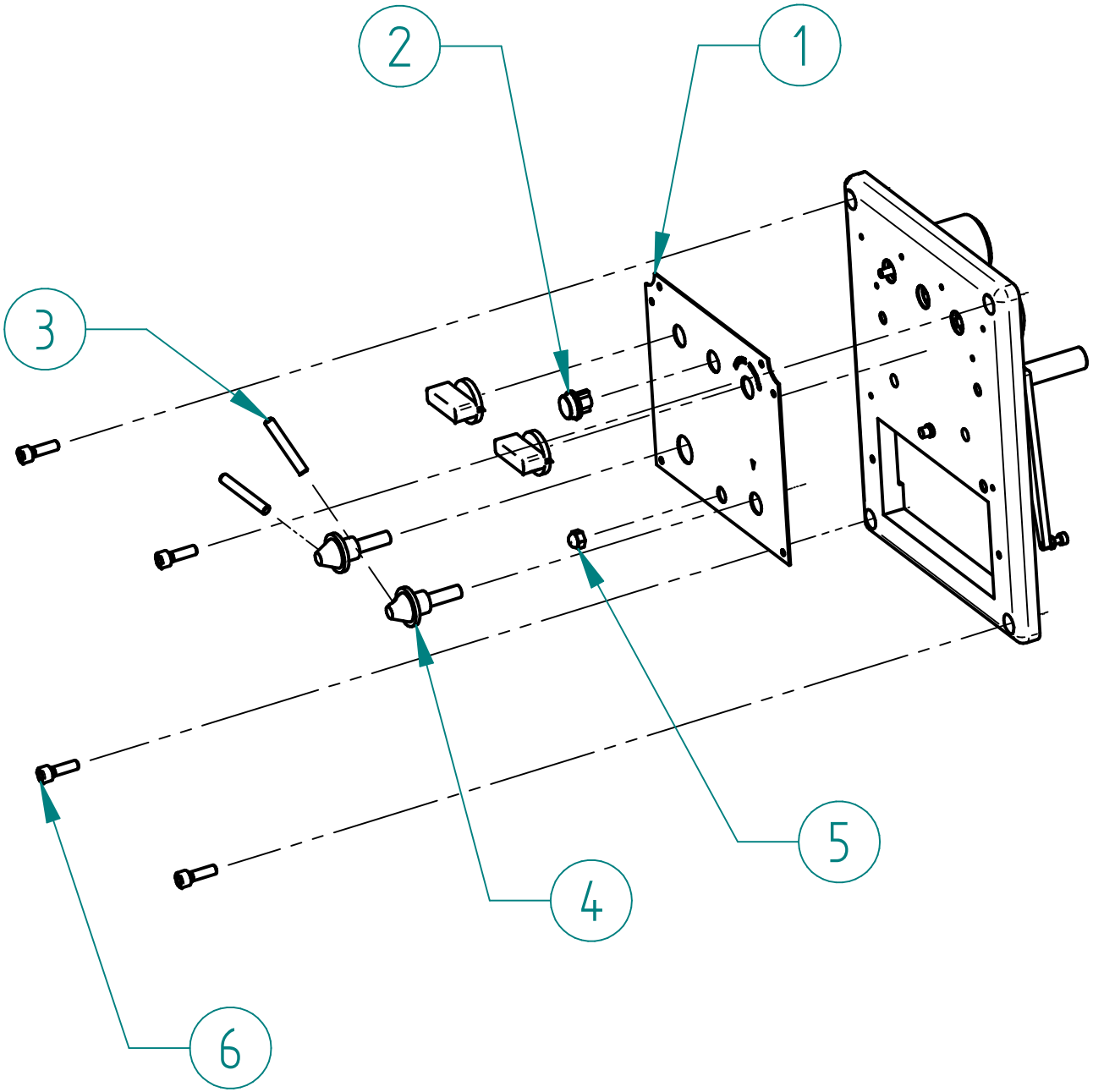

Item Number	File Name (no extension)	Quantity
	KN02MD FRONT CONTROL PANEL	
1	DKS – 00188 – KN02MD CONTROL LABEL	1
2	DKS – 00187 – KN02MD WARNING LIGHT	1
3	DKS – 00184 – KN02MD POINTER	2
4	DKS – 00185 – KN02MD ANNEAL&WELDING POINTER SHAFT	2
5	GSP – 00650 – M6 ACORN NUT	1
6	GSP – 00023 – M6x20 IMBUS BOLT	4

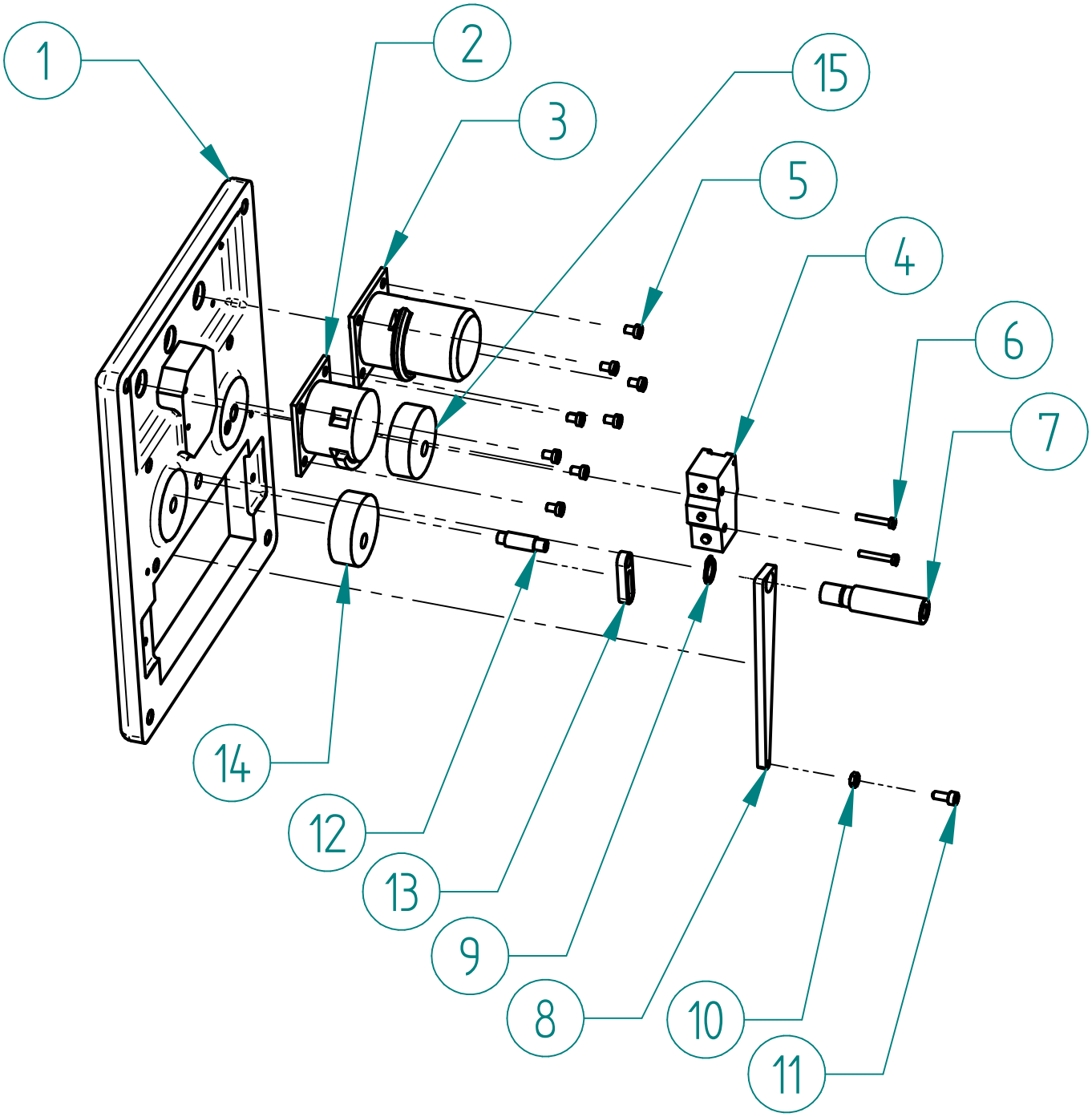

Item	File Name (no extension)	Quantity
	KN02MD FRONT CONTROL PANEL	
1	DKS – 00189 – KN02MD CONTROL LABEL PLATE	1
2	DKS – 00037 – RESISTANT WELDER WEL-ANN ROTARY SWITCH	1
3	DKS – 00038 – RESISTANT WELDER LEVEL ROTARY SWITCH	1
4	GSP – 00651 – KN02MD RESISTANT WELDER ANNEALING SWITCH	1
5	GSP – 00648 – M4x6 SCREW	8
6	GSP – 00649 – M3X20 SCREW	2
7	DKS – 00181 – KN02MD SPRING TENSION CONNECTION PART OF TRANSFORMER	1
8	DKS – 00180 – KN02MD SPRING TENSION LIM	1
9	GSP – 00647 – SNAP RING 11X1	1
10	GSP – 00255 – M4 NUT	1
11	GSP – 00006 – M4X10 IMBUS BOLT	1
12	DKS – 00183 – KN02MD POINTER SHAFT	1
13	DKS – 00182 – KN02MD POINTER LIM	1
14	DKS – 00574 – KN02MD ANNEAL&WELDING POINTER SHAFT HOUSING RIGHT	1
15	DKS – 00186 – KN02MD ANNEAL&WELDING POINTER SHAFT HOUSING LEFT	1

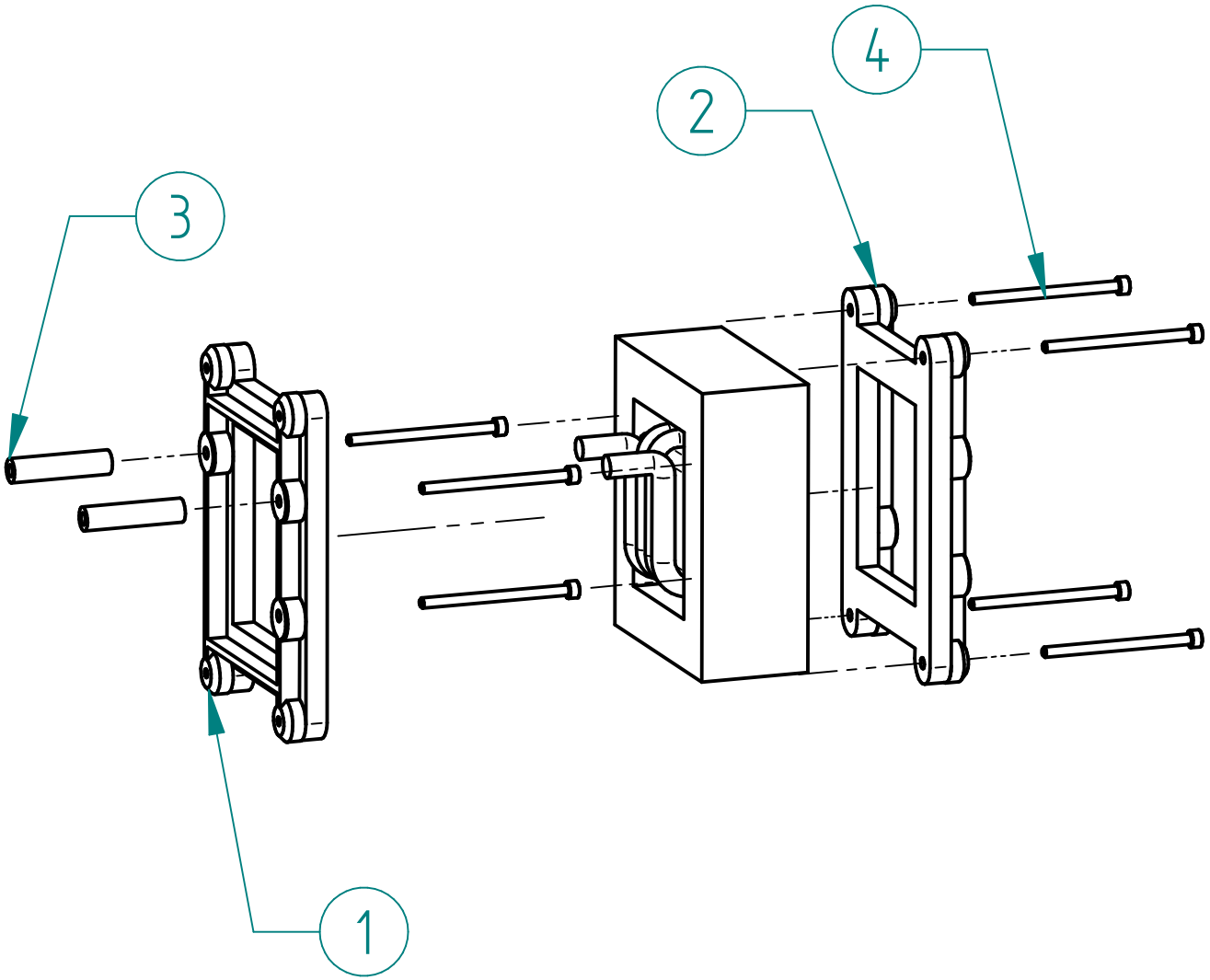

Item Number	File Name (no extension)	Quantity
	DKS – 00086 – RESISTANS WELDER TRANSFORMER	
1	DKS – 00493 – DK RESISTANCE WELDER TRANSFORMER FRONT ALUMINUM COVER	1
2	DKS – 00494 – DK RESISTANCE WELDER TRANSFORMER BACK ALUMINUM COVER	1
3	DKS – 00495 – DK RESISTANCE WELDER TRANSFORMER CONNECTION PART	2
4	GSP – 00904 – M6x90 IMBUS BOLT	7

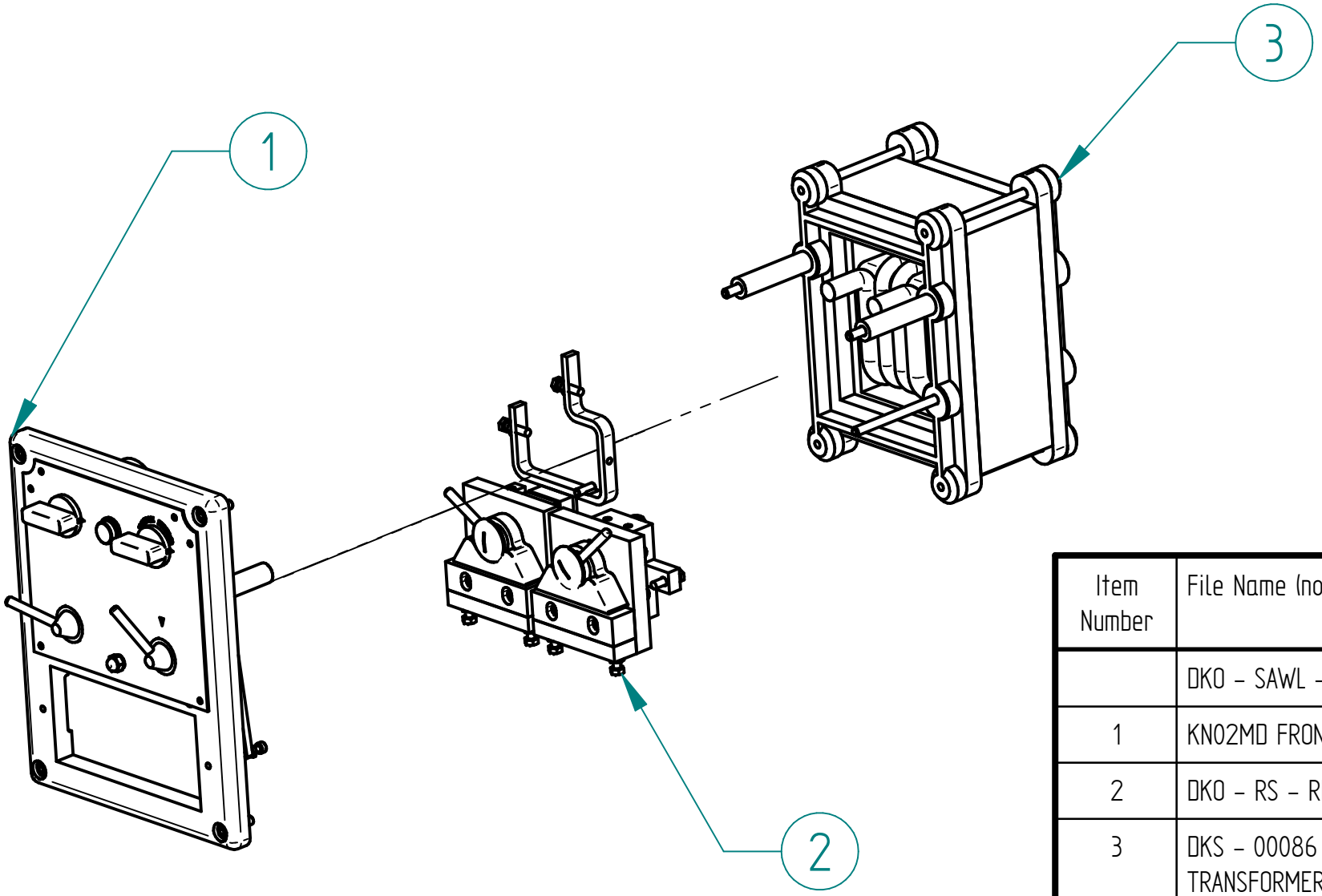

Item Number	File Name (no extension)	Quantity
	DKO – SAWL – KN02MD	
1	KN02MD FRONT CONTROL PANEL	1
2	DKO – RS – RESISTANT WELDER.	1
3	DKS – 00086 – RESISTANS WELDER TRANSFORMER	1

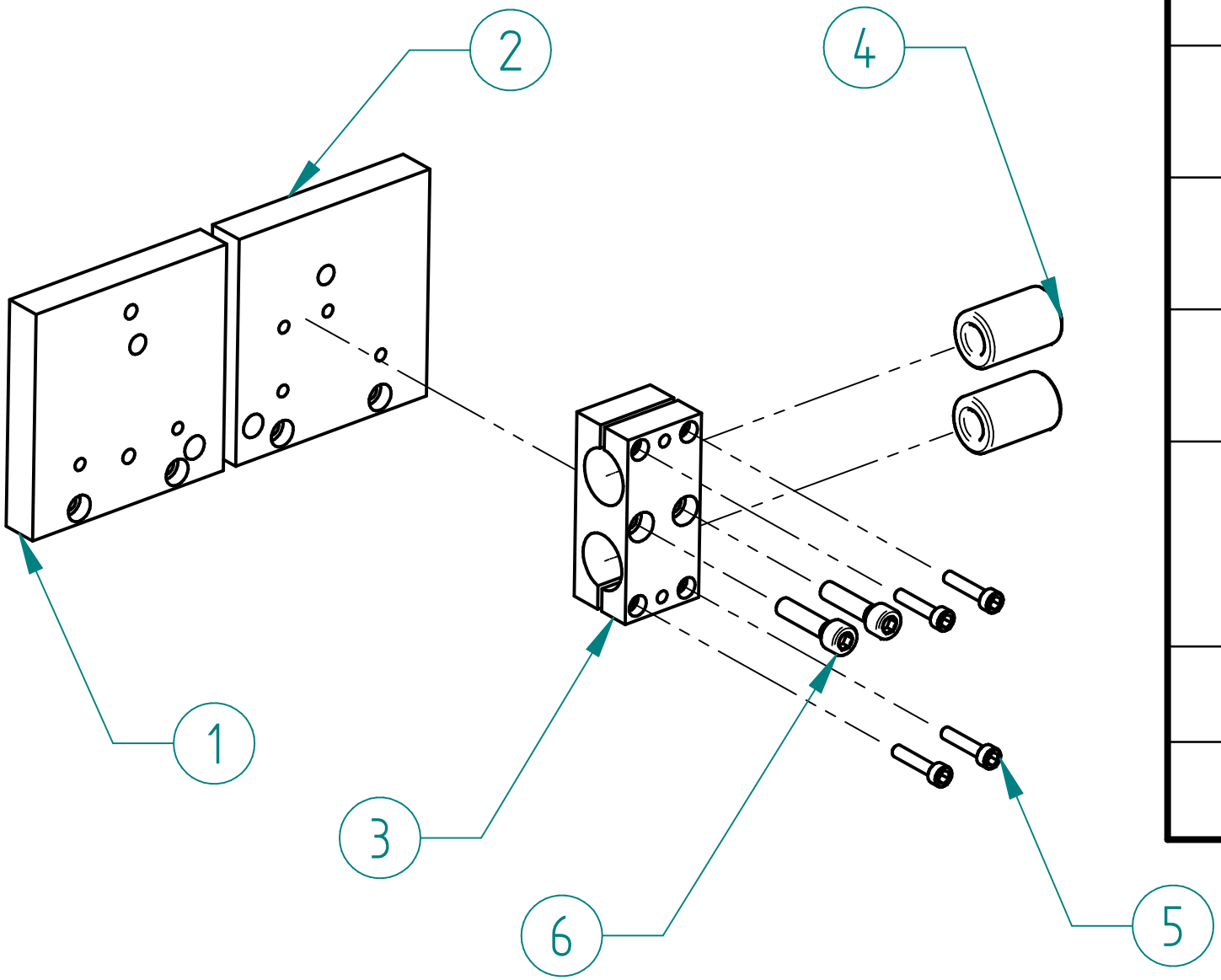

Item Number	File Name (no extension)	Quantity
	DKO – RS – RESISTANT WELDER.	
1	DKS – 00193 – KN02MD RESISTANT WELDER RIGHT SIDE MAIN PLATE	1
2	DKS – 00194 – KN02MD RESISTANT WELDER LEFT SIDE MAIN PLATE	1
3	DKS – 00197 – KN02MD RESISTANT WELDER LEFT SIDE BEARING HOUSING	1
4	GSP – 00471 – LM101929 – IKO LINEAR BUSHING BEARING – RESISTANT WELDER SHAFT HOUSING BEARING	2
5	GSP – 00008 – M4x20 IMBUS BOLT	4
6	GSP – 00024 – M6X25 IMBUS BOLT	2

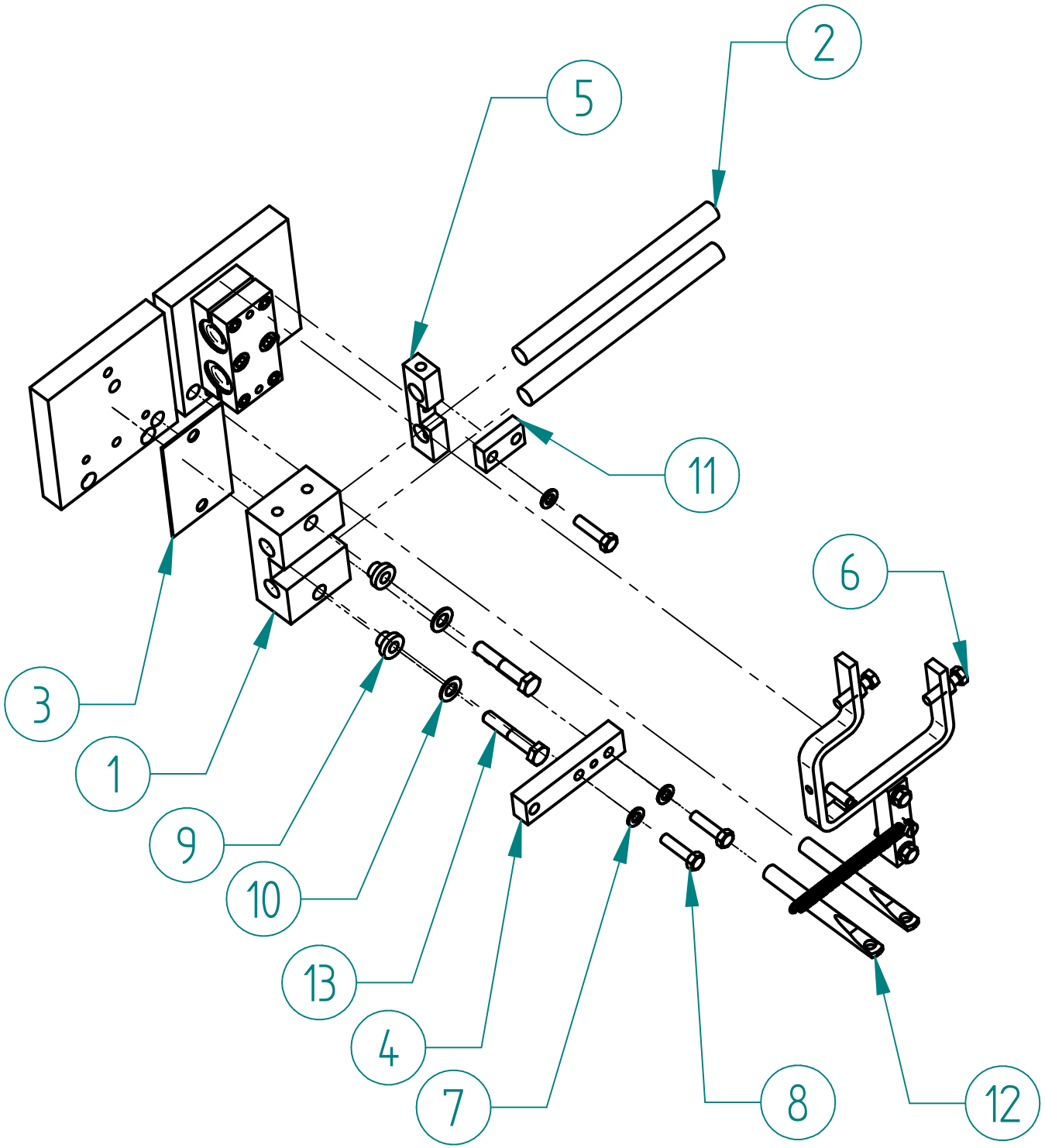

Item	File Name (no extension)	Quantity
	DKO – RS – RESISTANT WELDER.	
1	DKS – 00196 – KN02MD RESISTANT WELDER RIGHT SIDE SHAFT HOUSING	1
2	DKS – 00199 – KN02MD RESISTANT WELDER PLATE MAIN SHAFTS	2
3	DKS – 00195 – KN02MD RESISTANT WELDER RIGHT SIDE MAIN PLATE BACK FIBER	1
4	DKS – 00200 – KN02MD RESISTANT WELDER RIGHT SIDE SHAFT HOUSING INSULATION BLOCK FIBER	1
5	DKS – 00198 – KN02MD RESISTANT WELDER LEFT SIDE SHAFT HOUSING	1
6	DKS – 00202 – KN02MD RESISTANT WELDER COPPER WELDED PART	1
7	GSP – 00273 – M5 WASHER	3
8	GSP – 00117 – M5x20 HEXAGON BOLT	3
9	DKS – 00192 – KN02MD RESISTANT WELDER INSULATION WASHER	2
10	GSP – 00274 – M6 WASHER	2
11	DKS – 00201 – KN02MD RESISTANT WELDER LEFT SIDE SHAFT HOUSING ASSEMBLY LIM	1
12	DKS – 00203 – KN02MD RESISTANT WELDER TRANSFORMER ASSEMBLY PART	2
13	GSP – 00126 – M6x35 HEXAGON BOLT	2

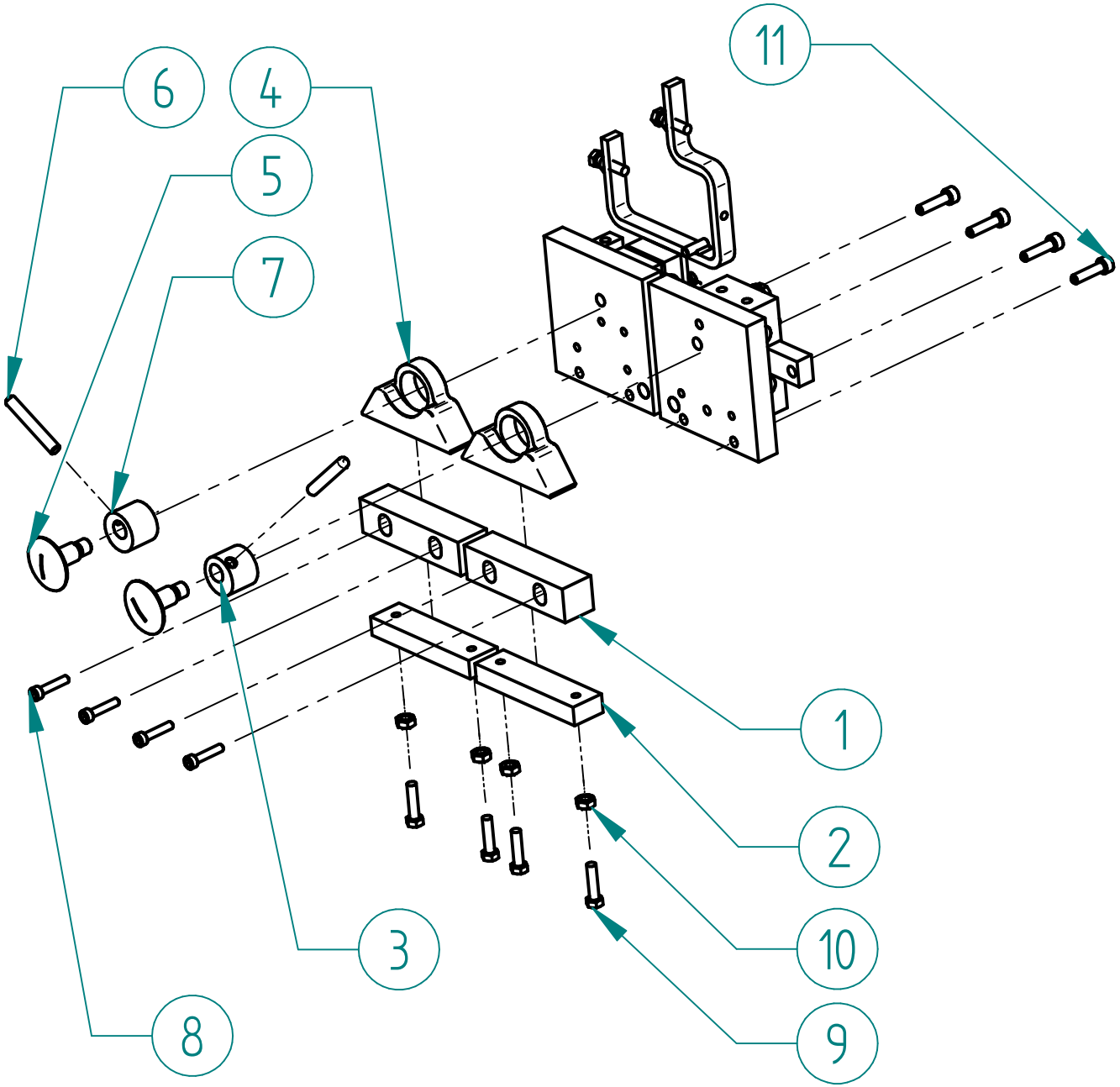

Item	File Name (no extension)	Quantity
	DKO – RS – RESISTANT WELDER.	
1	DKS – 00205 – KN02MD RESISTANT WELDER LOWER JAW	2
2	DKS – 00206 – KN02MD RESISTANT WELDER LOWER JAW ALIGNMENT PART	2
3	DKS – 00209 – KN02MD RESISTANT WELDER ECCENTRIC UPPER JAW CLAMPING HANDLE SHAFT HOUSING RIGHT	1
4	DKS – 00204 – KN02MD RESISTANT WELDER ECCENTRIC UPPER JAW	2
5	DKS – 00208 – KN02MD RESISTANT WELDER ECCENTRIC UPPER JAW CLAMPING HANDLE SHAFT	2
6	DKS – 00184 – KN02MD POINTER	2
7	DKS – 00210 – KN02MD RESISTANT WELDER ECCENTRIC UPPER JAW CLAMPING HANDLE SHAFT HOUSING LEFT	1
8	GSP – 00008 – M4x20 IMBUS BOLT	4
9	GSP – 00117 – M5x20 HEXAGON BOLT	4
10	GSP – 00256 – M5 NUT	4
11	GSP – 00015 – M5X20 IMBUS BOLT	4

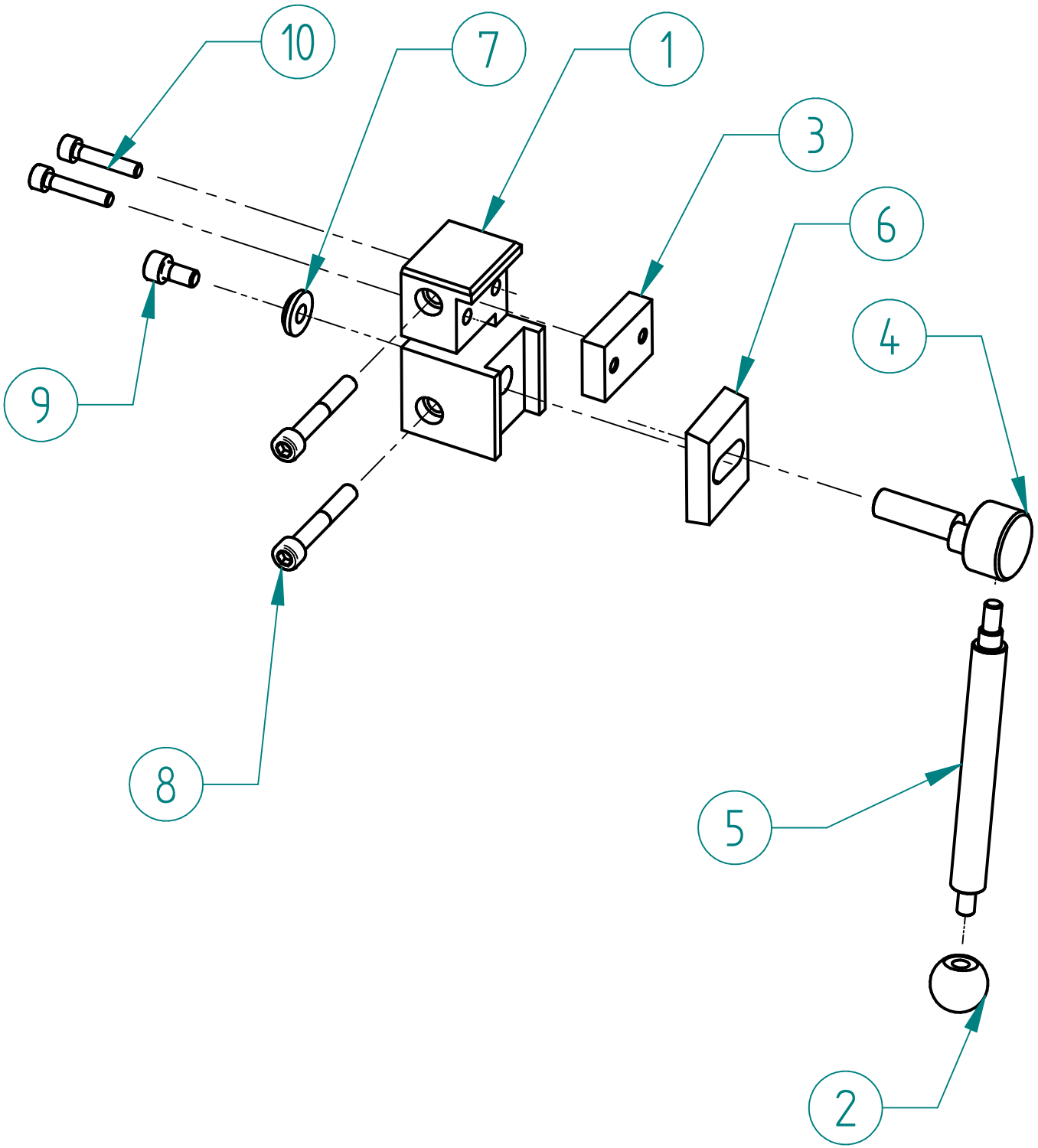

Item	File Name (no extension)	Quantity
	DKO – SAWL – DK COUNTER TYPE SHEAR CUTTER	
1	DKS – 00177 – DK COUNTER TYPE SHEAR CUTTER MAIN BODY	1
2	GSP – 00570 – M6 BALL KNOB	1
3	DKS – 00042 – DK COUNTER TYPE SHEAR CUTTER UPPER KNIFE	1
4	DKS – 00175 – DK COUNTER TYPE SHEAR CUTTER HANDLE SHAFT	1
5	DKS – 00174 – DK COUNTER TYPE SHEAR CUTTER HANDLE	1
6	DKS – 00176 – DK COUNTER TYPE SHEAR CUTTER LOWER KNIFE	1
7	DKS – 00173 – WASHER Q6_5-16-4 – DK COUNTER TYPE SHEAR CUTTER	1
8	GSP – 00027 – M6X40 IMBUS BOLT	2
9	GSP – 00021 – M6X12 IMBUS BOLT	1
10	GSP – 00016 – M5X25 IMBUS BOLT	2

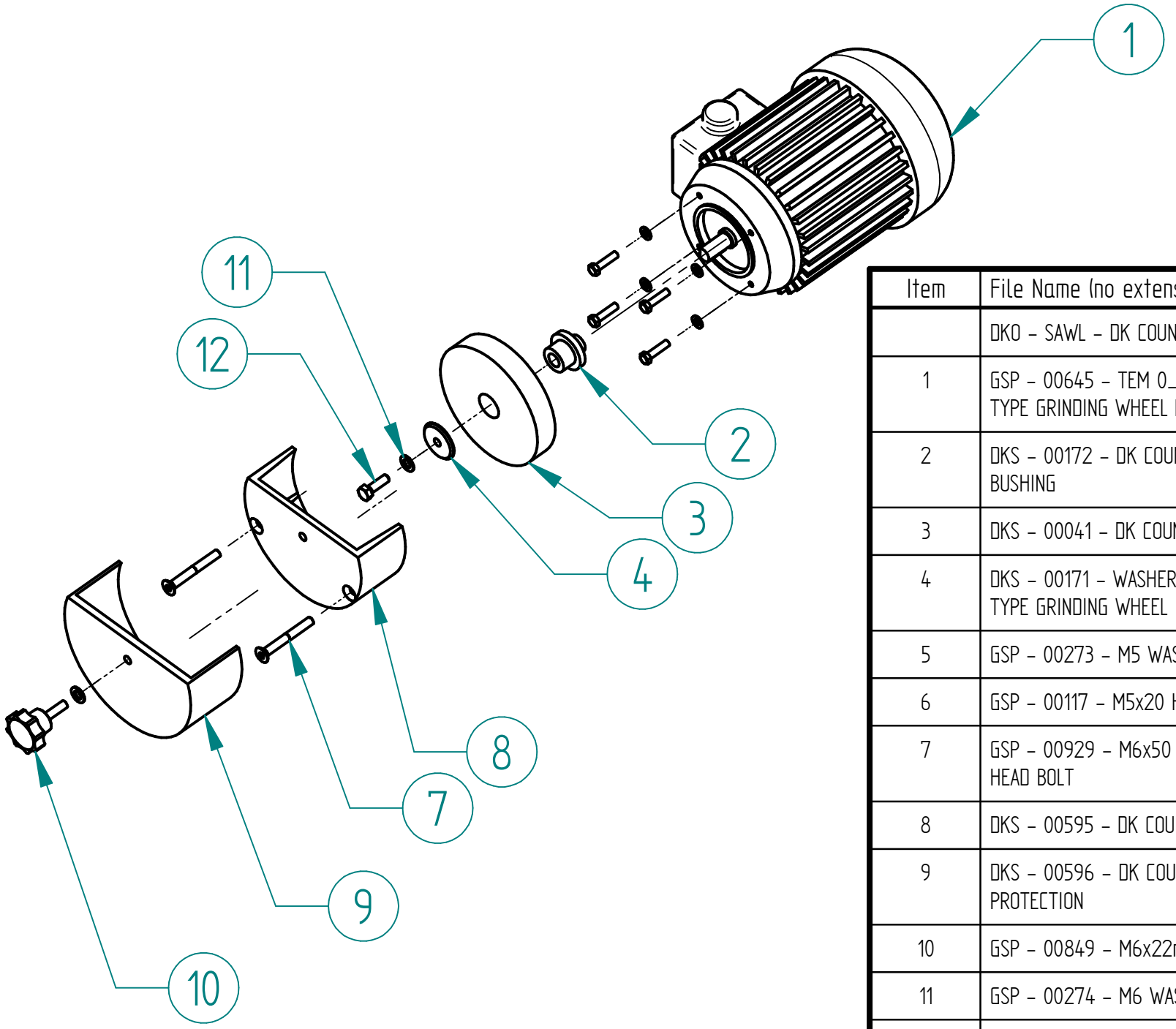

Item	File Name (no extension)	Quantity
	DKO – SAWL – DK COUNTER TYPE GRINDER	
1	GSP – 00645 – TEM 0_18 KW MOTOR – DK COUNTER TYPE GRINDING WHEEL MOTOR	1
2	DKS – 00172 – DK COUNTER TYPE GRINDING WHEEL BUSHING	1
3	DKS – 00041 – DK COUNTER TYPE GRINDING WHEEL	1
4	DKS – 00171 – WASHER Q6_5-30-20-5 – DK COUNTER TYPE GRINDING WHEEL	1
5	GSP – 00273 – M5 WASHER	4
6	GSP – 00117 – M5x20 HEXAGON BOLT	4
7	GSP – 00929 – M6x50 HEX SOCKET COUNTERSUNK HEAD BOLT	2
8	DKS – 00595 – DK COUNTER GRINDER FIXED PROTECTION	1
9	DKS – 00596 – DK COUNTER GRINDER MOTINAL PROTECTION	1
10	GSP – 00849 – M6x22mm MALE STAR KNOB	1
11	GSP – 00274 – M6 WASHER	2
12	GSP – 00139 – M6x20 HEXAGON BOLT	1