TAS 1001 SL TYPE GRINDING MACHINE EXPLODED VIEWS


Temelsan

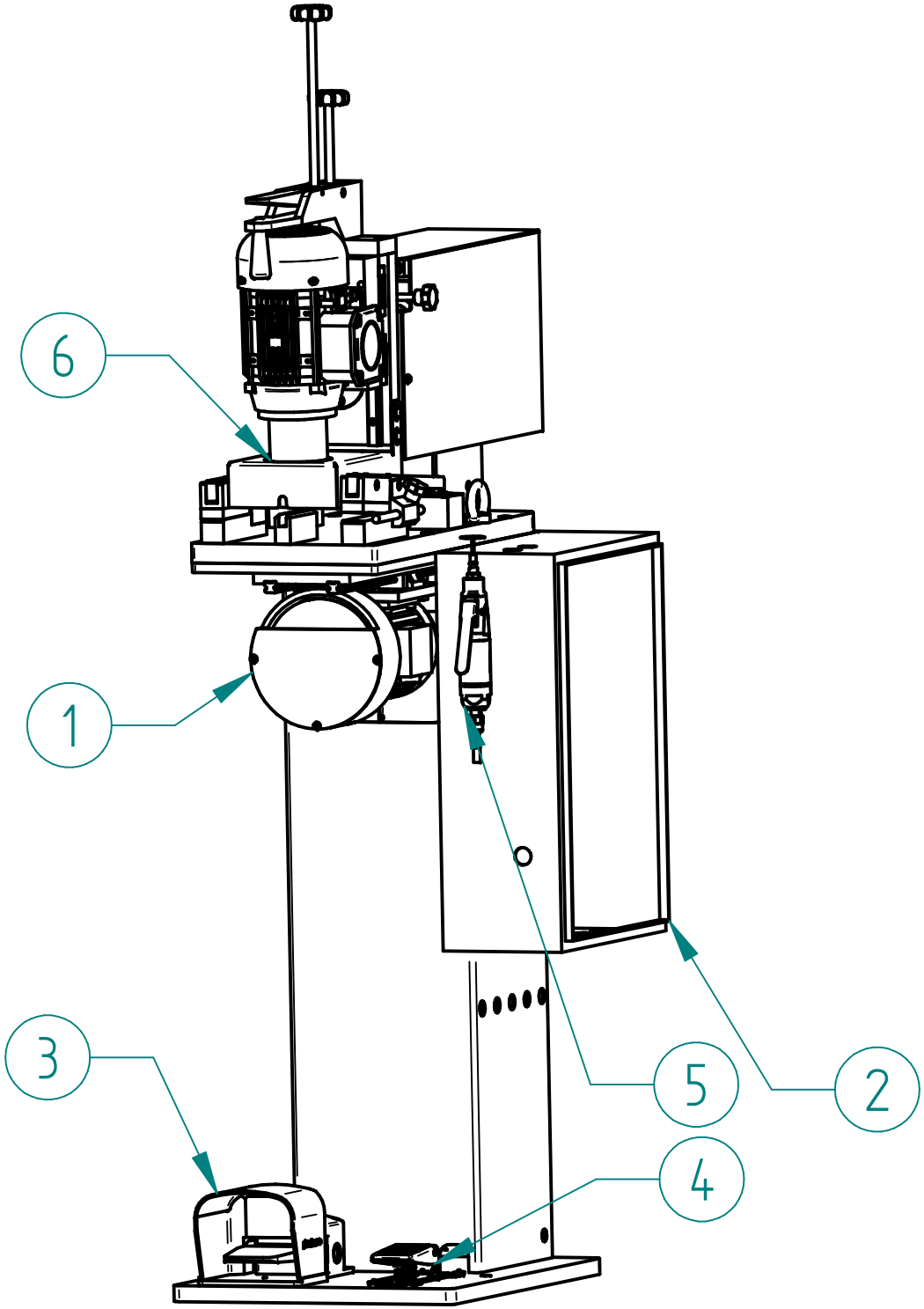

Item Number	File Name (no extension)	Quantity
	TAS 1001 SL-HP 3IN1 – SLIDING GRINDING MACHINE FULL	
1	TAS SL_RT BACK EDGE GRINDER	1
2	TAS-BC-ELECTRICAL CABINET	1
3	GSP – 00620 – SINGLE FOOT PEDAL	1
4	FSP – 00165 – SL_RT TYPE GRINDER PNEUMATIC FOOT PEDAL	1
5	GSP – 00634 – TAS SL_RT GRINDER PNEUMATIC DIE GRINDER	1
6	TAS SL MAIN GRINDER	1

MECHANICAL GROUP

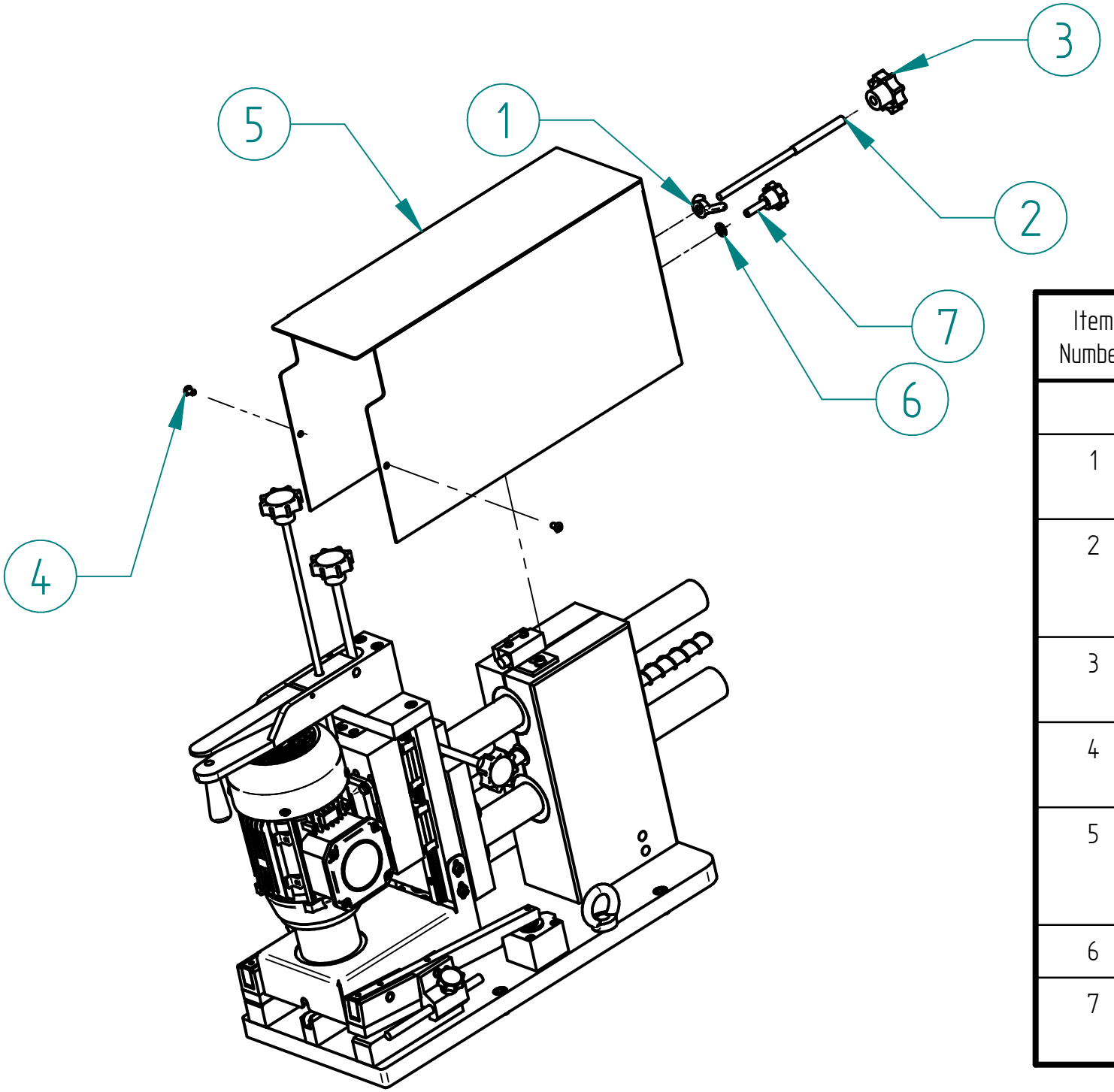

Item Number	File Name (no extension)	Quantity
	TAS 1001 SL-HP	
1	GSP – 00846 – M10 WING NUT	1
2	KNS – 00750 – TAS SL GRINDER STROKE LIMIT M10 STUD BOLT	1
3	GSP – 00575 – M10X50 STAR KNOB	1
4	GSP – 00244 – M6X10 LENTIL HEAD BOLT	2
5	KNS – 00773 – TAS SL GRINDER SLIDING GROUP PROTECTION COVER	1
6	GSP – 00275 – M8 WASHER	1
7	GSP – 00850 – M8x30mm MALE STAR KNOB	1

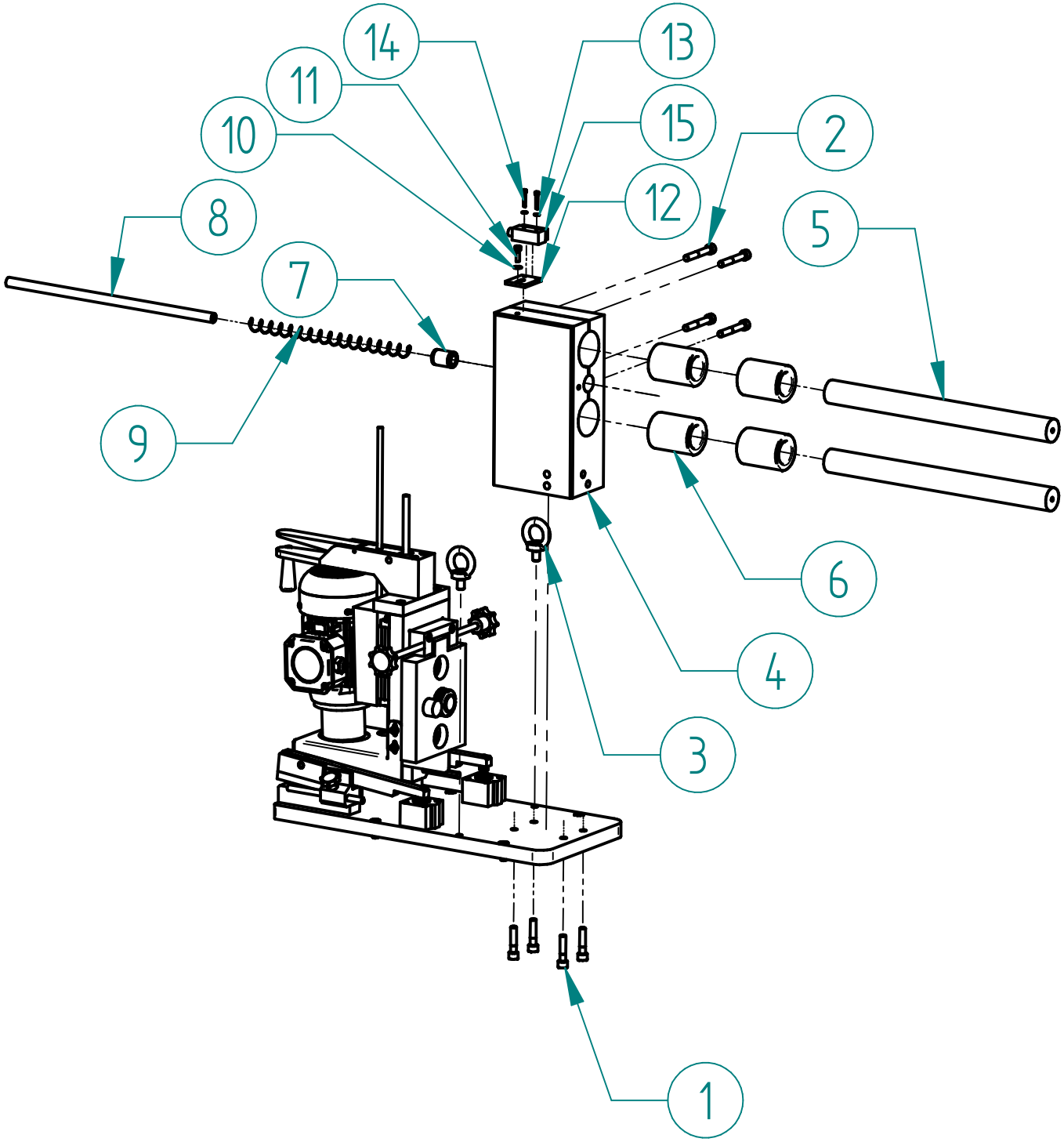

Item	File Name (no extension)	Quantity
	TAS 1001 SL-HP	
1	GSP – 00048 – M10x45 IMBUS BOLT	4
2	GSP – 00051 – M10x70 IMBUS BOLT	4
3	GSP – 00586 – M12 EYE BOLT	2
4	KNS – 00775 – TAS SL GRINDER SLIDING GROUP HOUSING	1
5	KNS – 00776 – TAS SL GRINDER MAIN SLIDER SHAFT	2
6	GSP – 00467 – LBE-40-UU LINEAR BUSHING BEARING – TAS SL GRINDER BACK PISTON HOUSING BEARING	4
7	GSP – 00464 – LME-16-UU LINEAR BEARING – CAP 80 STOPPER PISTON SHAFT BEARING	1
8	KNS – 00777 – TAS SL GRINDER SLIDING GROUP SPRING SHAFT	1
9	GSP – 00633 – TAS SL GRINDER BACK PISTON DIRECTION SPRING	1
10	GSP – 00274 – M6 WASHER	1
11	GSP – 00023 – M6x20 IMBUS BOLT	1
12	KNS – 00857 – TAS SL SWITCH LIM	1
13	GSP – 00272 – M4 WASHER	2
14	GSP – 00009 – M4X25 IMBUS BOLT	2
15	GSP – 00893 – TAS SL SWITCH	1

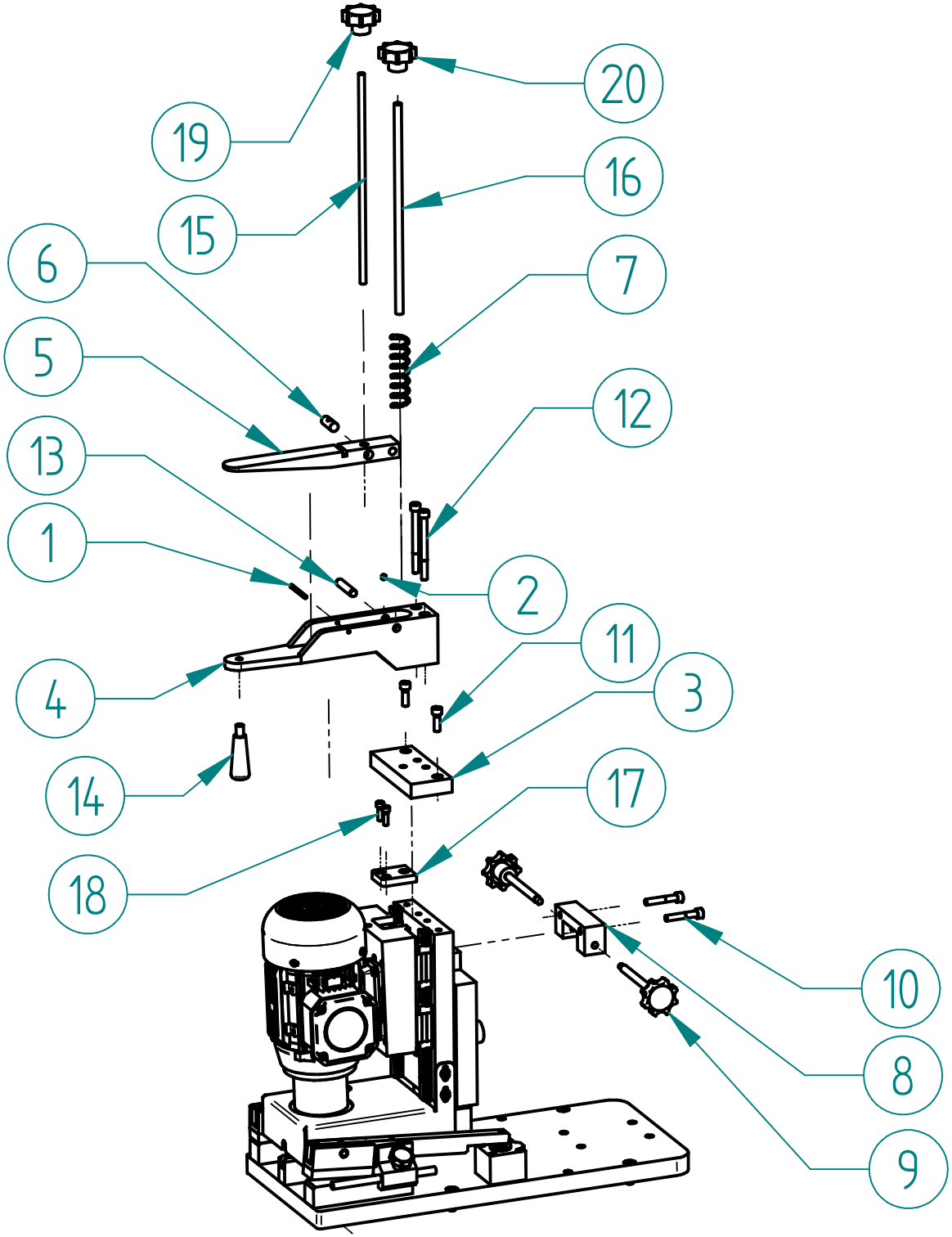

Item	File Name (no extension)	Quantity
	TAS 1001 SL-HP	
1	GSP - 00409 - STEEL PIN Q4X50	1
2	GSP - 00308 - M6x6 SETSCREW	1
3	KNS - 00766 - TAS SL GRINDER POST ELEVATION GROUP MOUNTING LIM	1
4	KNS - 00769 - TAS SL GRINDER POST ELEVATION MAIN BLOCK	1
5	KNS - 00770 - TAS SL GRINDER POST ELEVATION ADJUSTMENT HANDLE	1
6	KNS - 00780 - TAS SL GRINDER NUT FOR M10 KNOB STUD BOLT	1
7	GSP - 00632 - TAS SL GRINDER MAIN STUD SPRING	1
8	KNS - 00768 - TAS SL GRINDER TILT ADJUSTMENT BLOCK	1
9	GSP - 00853 - M10x110 MALE STAR KNOB	2
10	GSP - 00037 - M8X45 IMBUS BOLT	2
11	GSP - 00033 - M8x25 IMBUS BOLT	2
12	GSP - 00042 - M8x90 IMBUS BOLT	2
13	GSP - 00408 - STEEL PIN Q10X50	1
14	GSP - 00576 - TAS SL_RT GRINDER M10 HANDLE	1
15	KNS - 00134 - SL TYPE GRINDER LOAD CONTROL SHAFT	1
16	KNS - 00135 - SL TYPE GRINDER HEIGHT CONTROL SHAFT	1
17	KNS - 00761 - TAS SL GRINDER SPRING HOLDER	1
18	GSP - 00023 - M6x20 IMBUS BOLT	3
19	GSP - 00717 - M8 Q50 FEMALE STAR KNOB	1
20	GSP - 00575 - M10X50 STAR KNOB	1

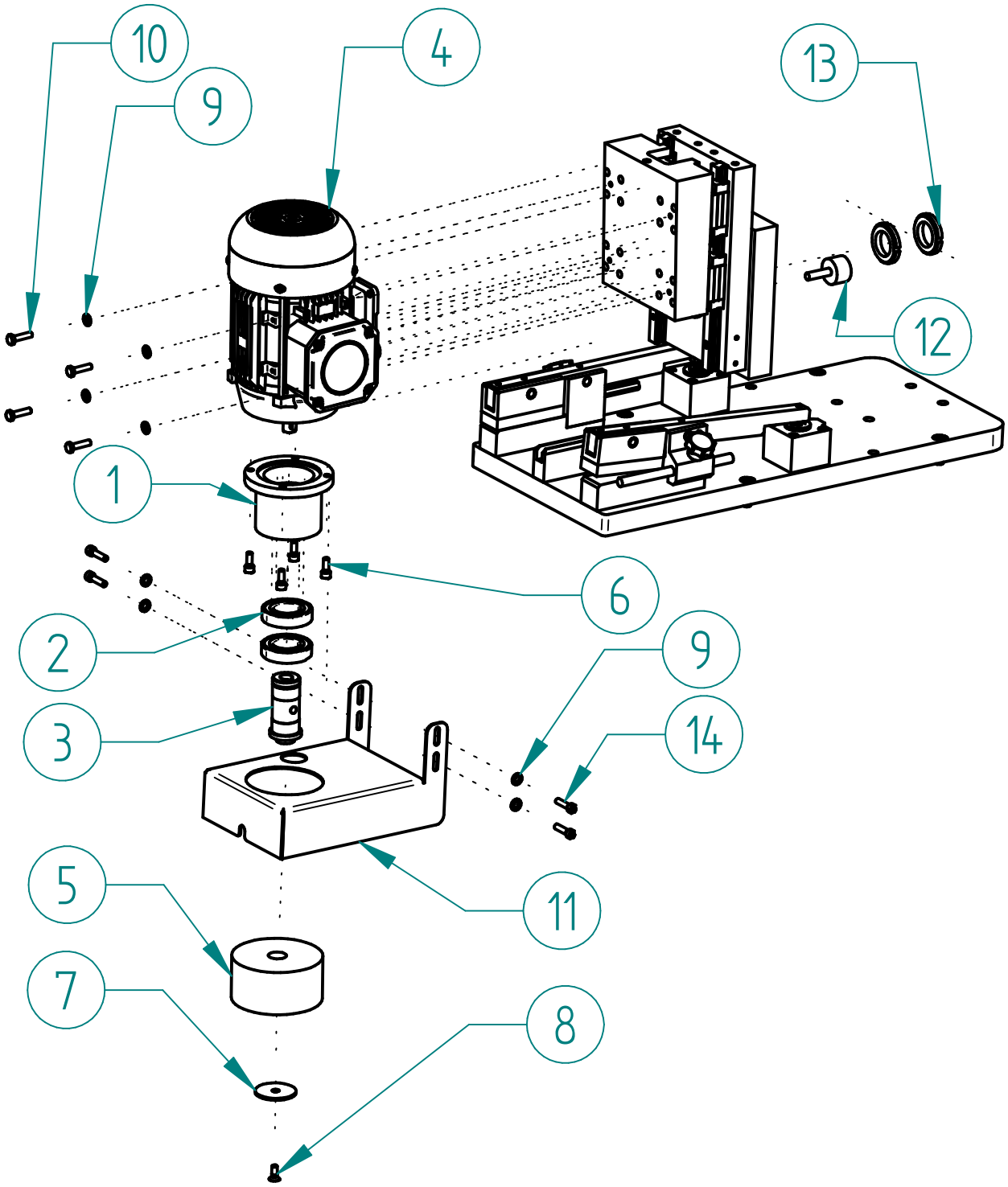

Item	File Name (no extension)	Quantity
	TAS 1001 SL-HP	
1	KNS – 00758 – TAS SL GRINDER EXTEND SHAFT HOUSING	1
2	GSP – 00451 – 6006-2Z-C3 SKF BEARING – TAS SL MOTOR SHAFT BEARING	2
3	KNS – 00757 – TAS SL GRINDER EXTEND SHAFT	1
4	GSP – 00630 – WAT 0_55 KW MOTOR – Q2EFC71M2B40-FL – TAS SL GRINDER GRINDING WHEEL MOTOR	1
5	KNS – 00103 – SL TYPE GRINDING CUP	1
6	GSP – 00022 – M6X16 IMBUS BOLT	4
7	KNS – 00741 – Q8-45-6 METAL WASHER	1
8	GSP – 00413 – M6X16 HEX SOCKET COUNTERSUNK HEAD BOLT	1
9	GSP – 00274 – M6 WASHER	9
10	GSP – 00125 – M6X25 HEXAGON BOLT	4
11	KNS – 00762 – TAS SL GRINDER GRINDING WHEEL PROTECTION	1
12	GSP – 00378 – M8 RUBBER STOPPER	1
13	GSP – 00499 – KM-6 LOCK NUT	2
14	GSP – 00024 – M6X25 IMBUS BOLT	4

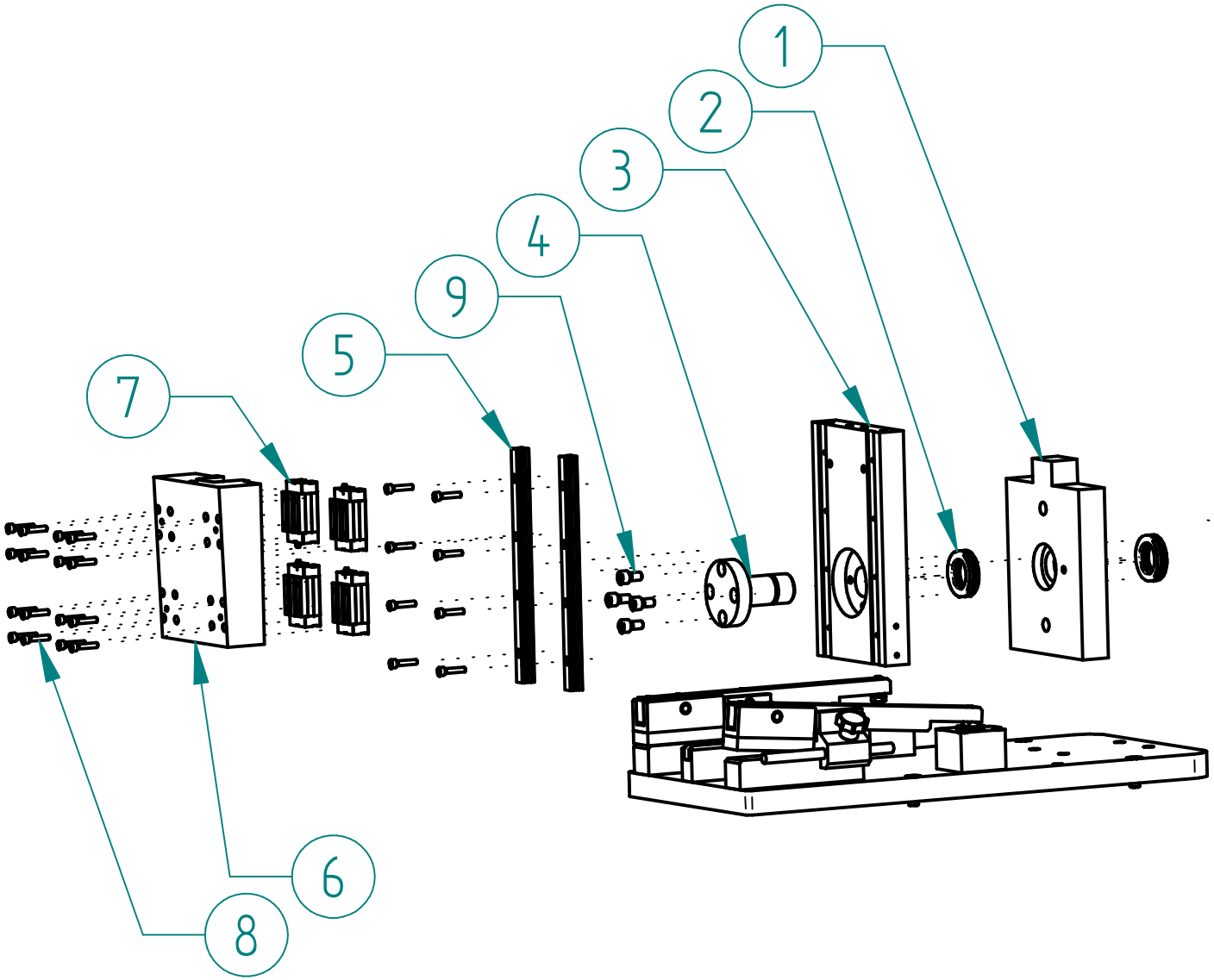

Item Number	File Name (no extension)	Quantity
	TAS 1001 SL-HP	
1	KNS – 00767 – TAS SL GRINDER TILTING BLOCK	1
2	GSP – 00466 – 51106 SKF SINGLE DIRECTION THRUST BEARING – TAS SL GRINDER MOTOR HOUSING BEARING	2
3	KNS – 00764 – TAS SL GRINDER LINEAR RAIL MOUNTING PLATE	1
4	KNS – 00765 – TAS SL GRINDER LINEAR MOVING PLATE FLANGE	1
5	GSP – 00631 – H15x240 LINEAR RAIL	2
6	KNS – 00760 – TAS SL GRINDER LINEAR MOVING BLOCK	1
7	GSP – 00454 – LLTHC 15 R T0P5 SKF BEARING – TAS SL MAIN GRINDER LINEAR BEARING	4
8	GSP – 00016 – M5X25 IMBUS BOLT	24
9	GSP – 00031 – M8X16 IMBUS BOLT	4

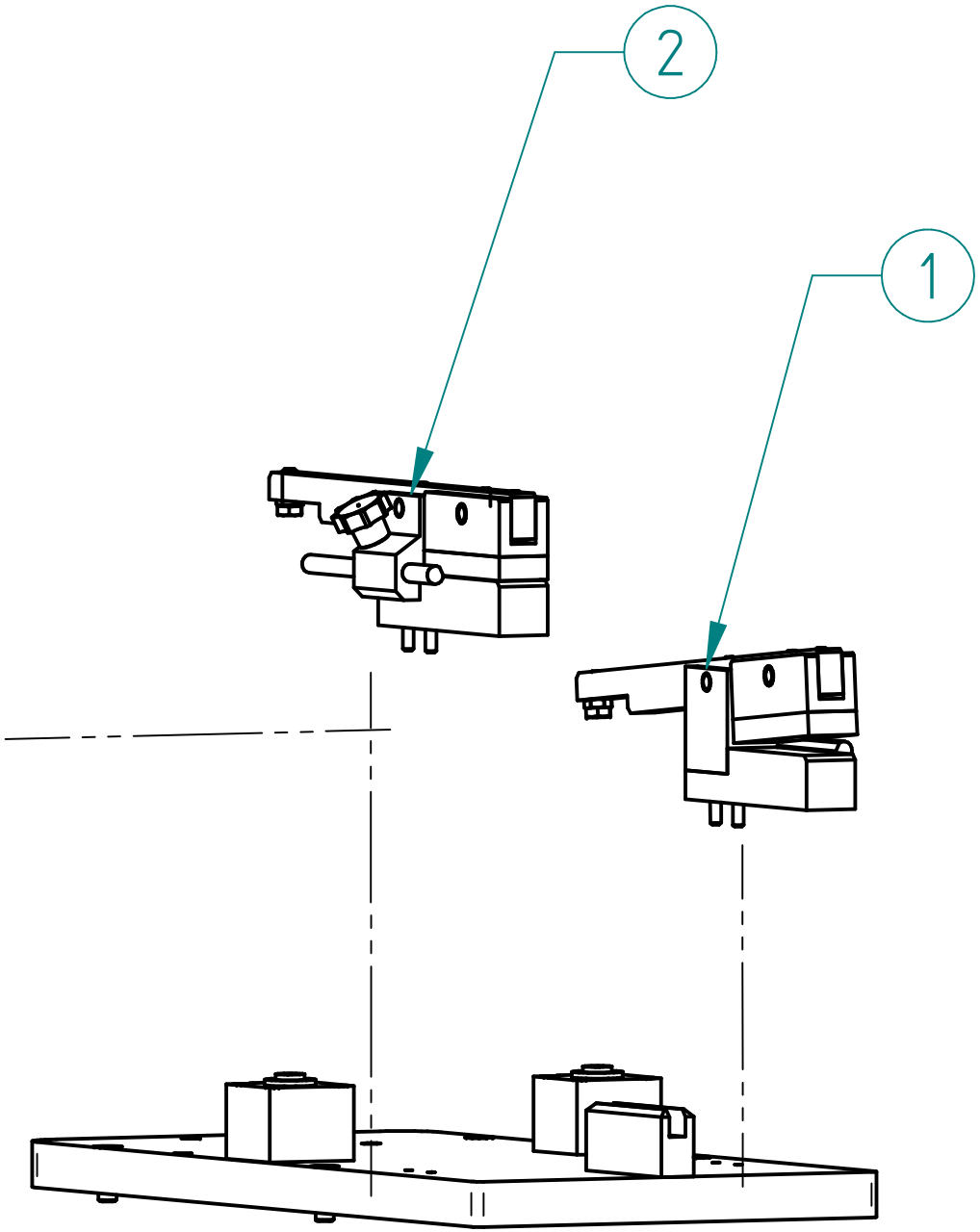

Item	File Name (no extension)	Quantity
	TAS 1001 SL-HP	
1	KNS – 00739 – TAS SL GRINDER BANDSAW CLAMP ARM RIGHT SET	1
2	KNS – 00740 – TAS SL GRINDER BANDSAW CLAMP ARM LEFT SET	1

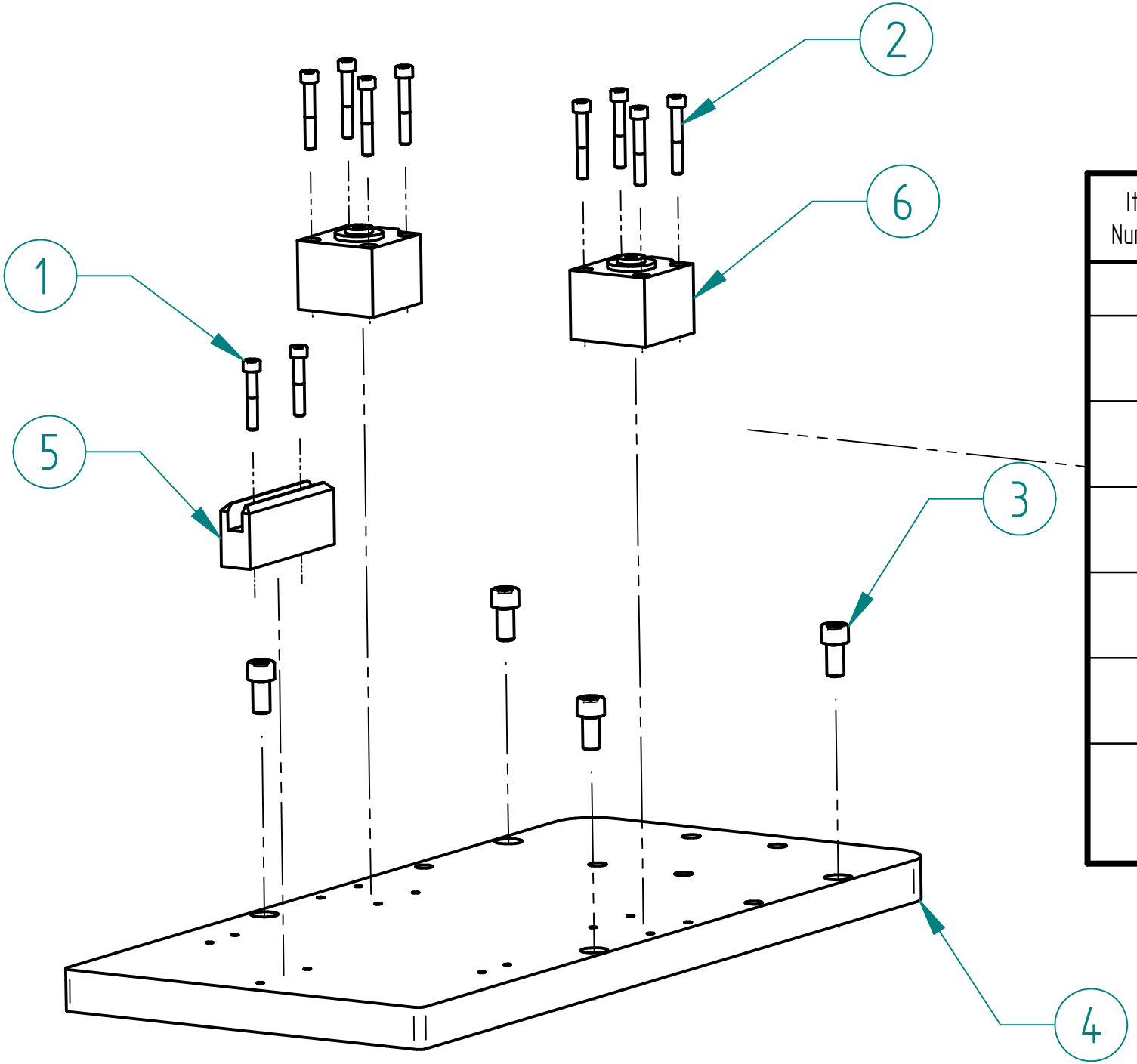

Item Number	File Name (no extension)	Quantity
	TAS 1001 SL-HP	
1	GSP – 00026 – M6X35 IMBUS BOLT	2
2	GSP – 00027 – M6X40 IMBUS BOLT	8
3	GSP – 00043 – M10x20 IMBUS BOLT	4
4	KNS – 00778 – TAS SL GRINDER MAIN PLATE	1
5	KNS – 00107 – SL TYPE GRINDER BAND CENTER PART	1
6	FSP – 00107 – TEKMAKSAN PNEUMATIC CYLINDER TJS-40X15	2

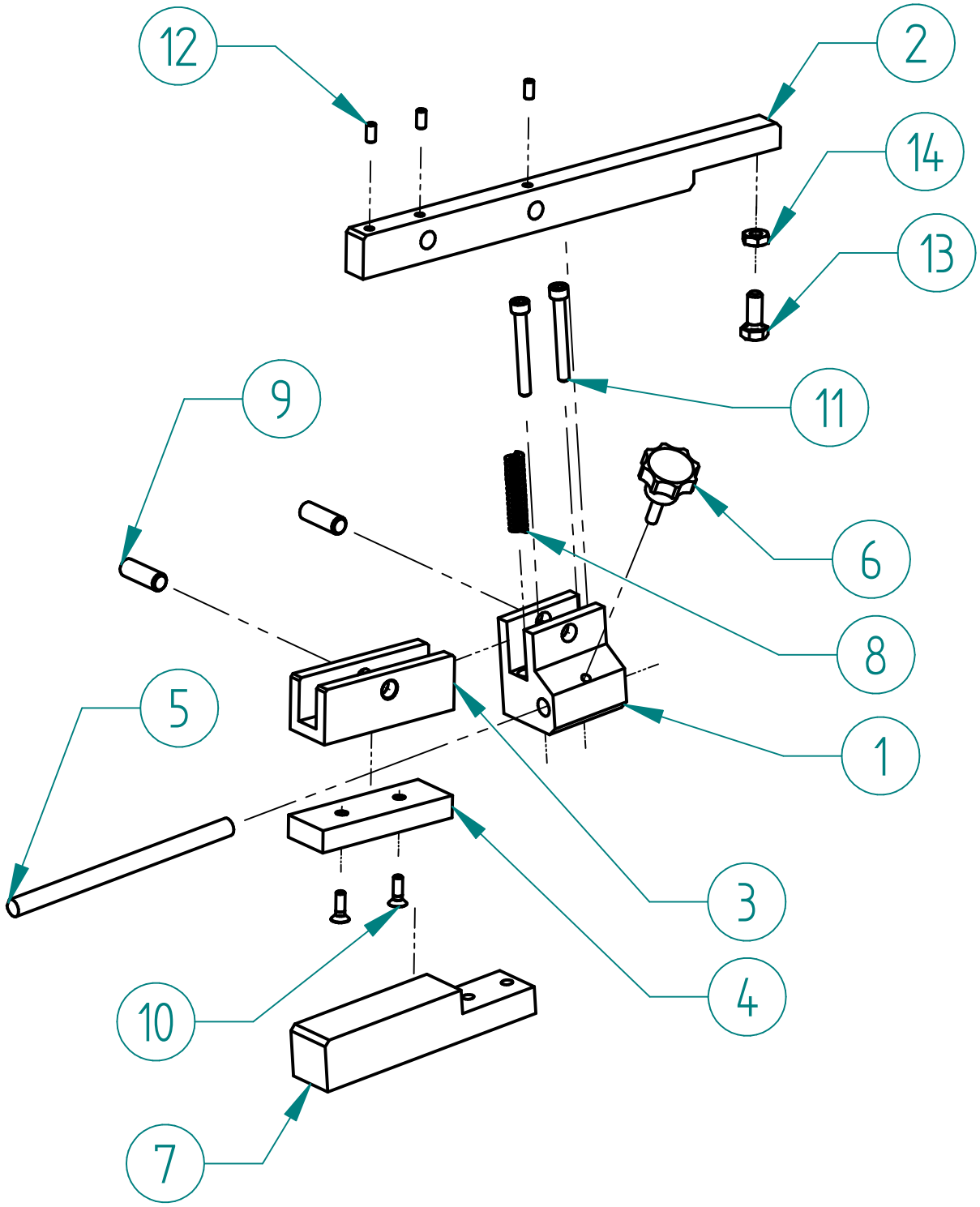

Item	File Name (no extension)	Quantity
	KNS – 00739 – TAS SL GRINDER BANDSAW CLAMP ARM RIGHT SET	
1	KNS – 00752 – TAS SL_RT GRINDER BANDSAW CLAMP HOUSING RIGHT SIDE	1
2	KNS – 00751 – TAS SL GRINDER BANDSAW CLAMP ARM	1
3	KNS – 00753 – TAS SL GRINDER BANDSAW PARALLEL CLAMPER BASE	1
4	KNS – 00754 – TAS SL GRINDER BANDSAW CLAMP UPPER PAD	1
5	KNS – 00731 – TAS SL GRINDER BANDSAW SIZE ADJUSTMENT STOPPER	1
6	GSP – 00849 – M6x22mm MALE STAR KNOB	1
7	KNS – 00109 – TAS SL GRINDER BANDSAW CLAMP LOWER PAD	1
8	GSP – 00593 – MOLD SPRING GREEN 9X45	1
9	GSP – 00407 – STEEL PIN Q10X30	2
10	GSP – 00412 – M5X16 HEX SOCKET COUNTERSUNK HEAD BOLT	2
11	GSP – 00029 – M6x50 IMBUS BOLT	2
12	GSP – 00293 – M5x10 SETSCREW	3
13	GSP – 00154 – M8x20 HEXAGON BOLT	1
14	GSP – 00258 – M8 NUT	1

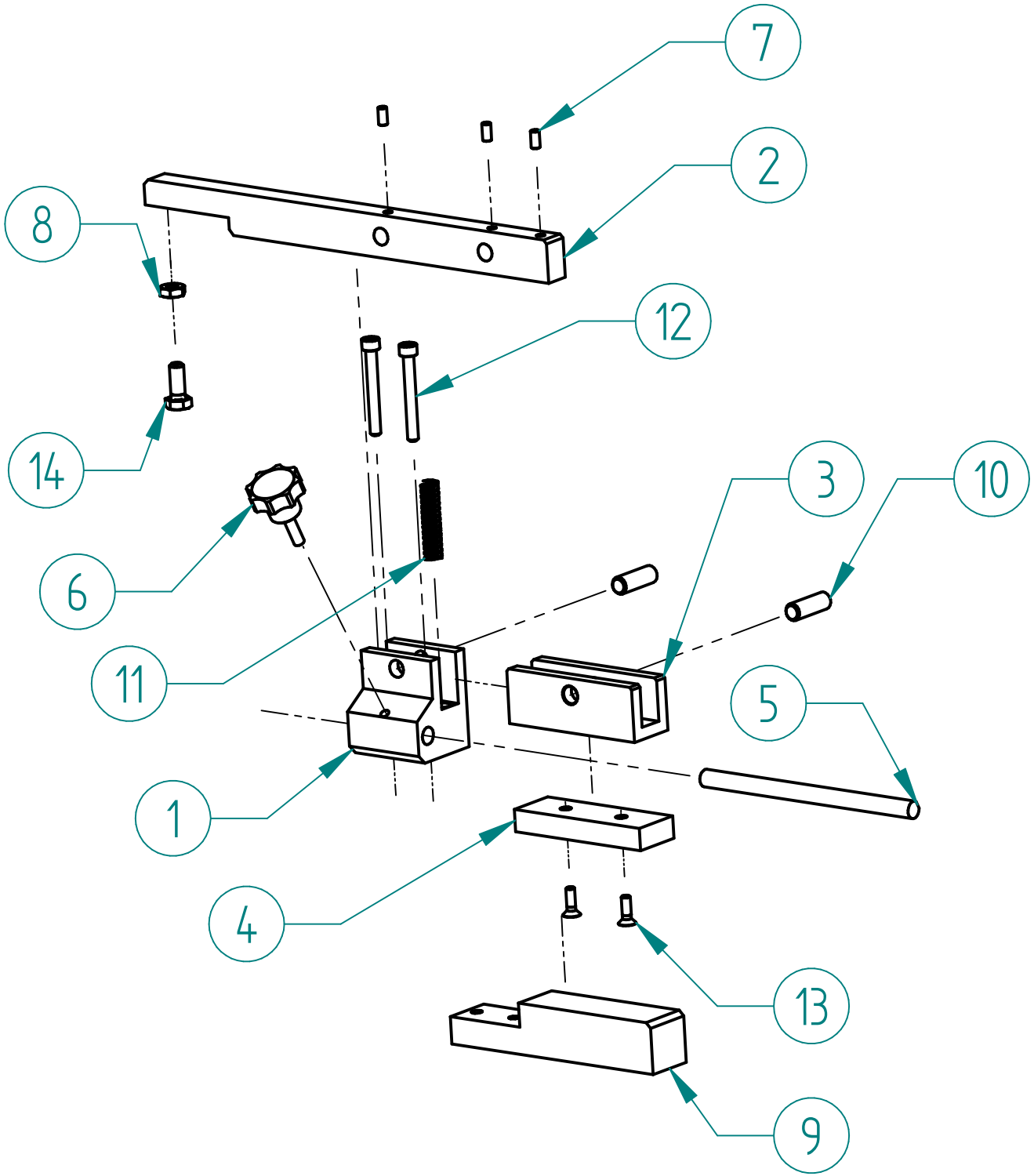

Item	File Name (no extension)	Quantity
	KNS – 00740 – TAS SL GRINDER BANDSAW CLAMP ARM LEFT SET	
1	KNS – 00756 – TAS SL_RT GRINDER BANDSAW CLAMP HOUSING LEFT SIDE	1
2	KNS – 00751 – TAS SL GRINDER BANDSAW CLAMP ARM	1
3	KNS – 00753 – TAS SL GRINDER BANDSAW PARALLEL CLAMPER BASE	1
4	KNS – 00754 – TAS SL GRINDER BANDSAW CLAMP UPPER PAD	1
5	KNS – 00731 – TAS SL GRINDER BANDSAW SIZE ADJUSTMENT STOPPER	1
6	GSP – 00849 – M6x22mm MALE STAR KNOB	1
7	GSP – 00293 – M5x10 SETSCREW	3
8	GSP – 00258 – M8 NUT	1
9	KNS – 00109 – TAS SL GRINDER BANDSAW CLAMP LOWER PAD	1
10	GSP – 00407 – STEEL PIN Q10X30	2
11	GSP – 00593 – MOLD SPRING GREEN 9X45	1
12	GSP – 00029 – M6x50 IMBUS BOLT	2
13	GSP – 00412 – M5X16 HEX SOCKET COUNTERSUNK HEAD BOLT	2
14	GSP – 00154 – M8x20 HEXAGON BOLT	1

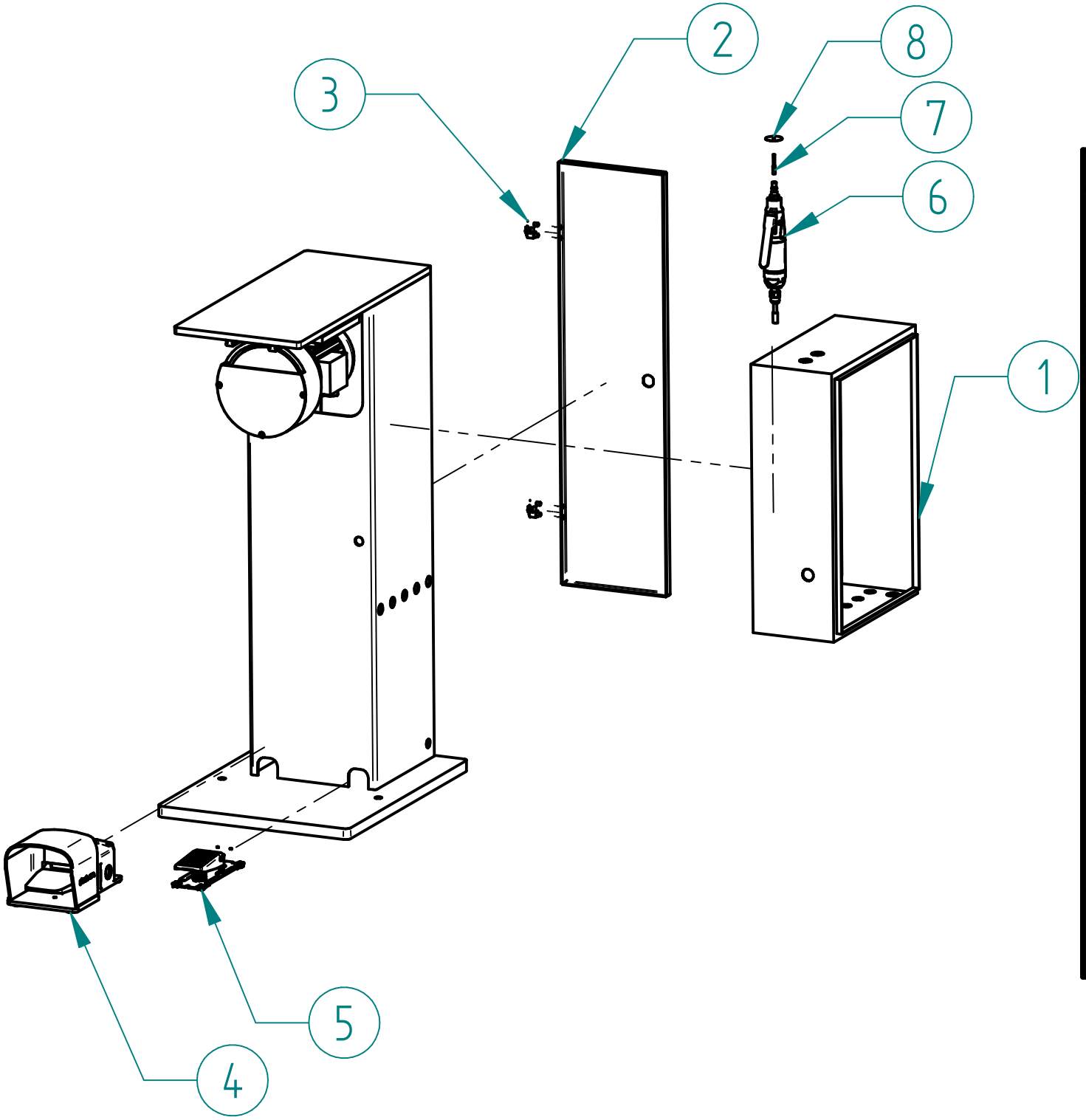

Item	File Name (no extension)	Quantity
	KNS – 00779 – TAS SL_RT GRINDER BACK EDGE GRINDING SYSTEM	
1	TAS-BC-ELECTRICAL CABINET	1
2	TAS-BC-BACK DOOR	1
3	GSP – 00431 – DOOR HINGE 1	2
4	GSP – 00620 – SINGLE FOOT PEDAL	1
5	FSP – 00165 – SL_RT TYPE GRINDER PNEUMATIC FOOT PEDAL	1
6	GSP – 00634 – TAS SL_RT GRINDER PNEUMATIC DIE GRINDER	1
7	KNS – 00138 – SL_RT TYPE GRINDER HAND TOOL SHAFT	1
8	KNS – 00106 – SL_RT TYPE GRINDER HAND TOOL DISK	1

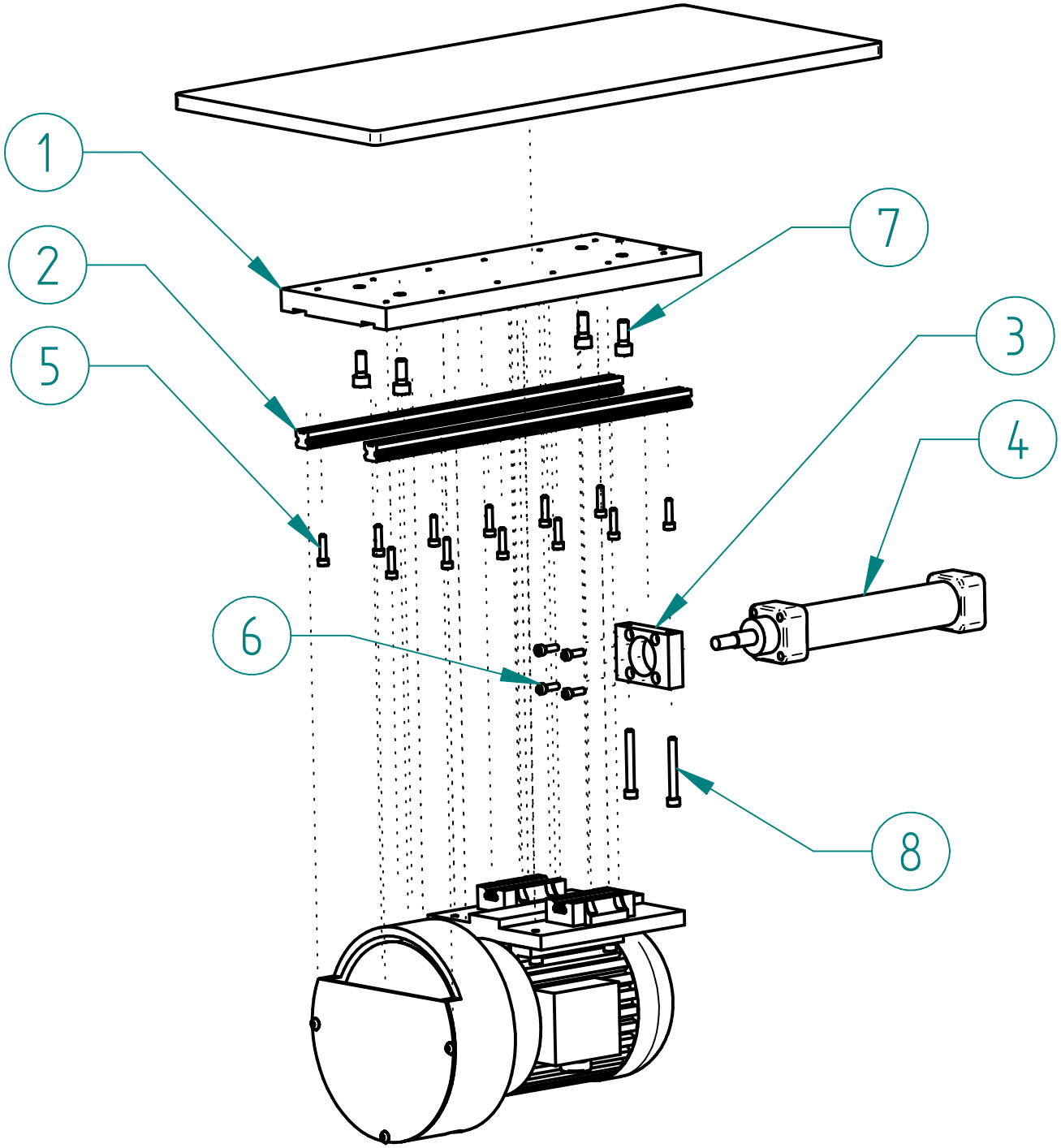

Item	File Name (no extension)	Quantity
	KNS – 00779 – TAS SL_RT GRINDER BACK EDGE GRINDING SYSTEM	
1	KNS – 00717 – TAS SL_RT GRINDER MOTOR GROUP ASSEMBLY PLATE	1
2	GSP – 00621 – H15x340 LINEAR RAIL	2
3	KNS – 00719 – TAS SL_RT GRINDER PISTON HOUSING	1
4	FSP – 00106 – TEKMAKSAN PNEUMATIC CYLINDER TITS-32X160	1
5	GSP – 00015 – M5X20 IMBUS BOLT	12
6	GSP – 00014 – M5X16 IMBUS BOLT	4
7	GSP – 00032 – M8X20 IMBUS BOLT	4
8	GSP – 00029 – M6x50 IMBUS BOLT	2

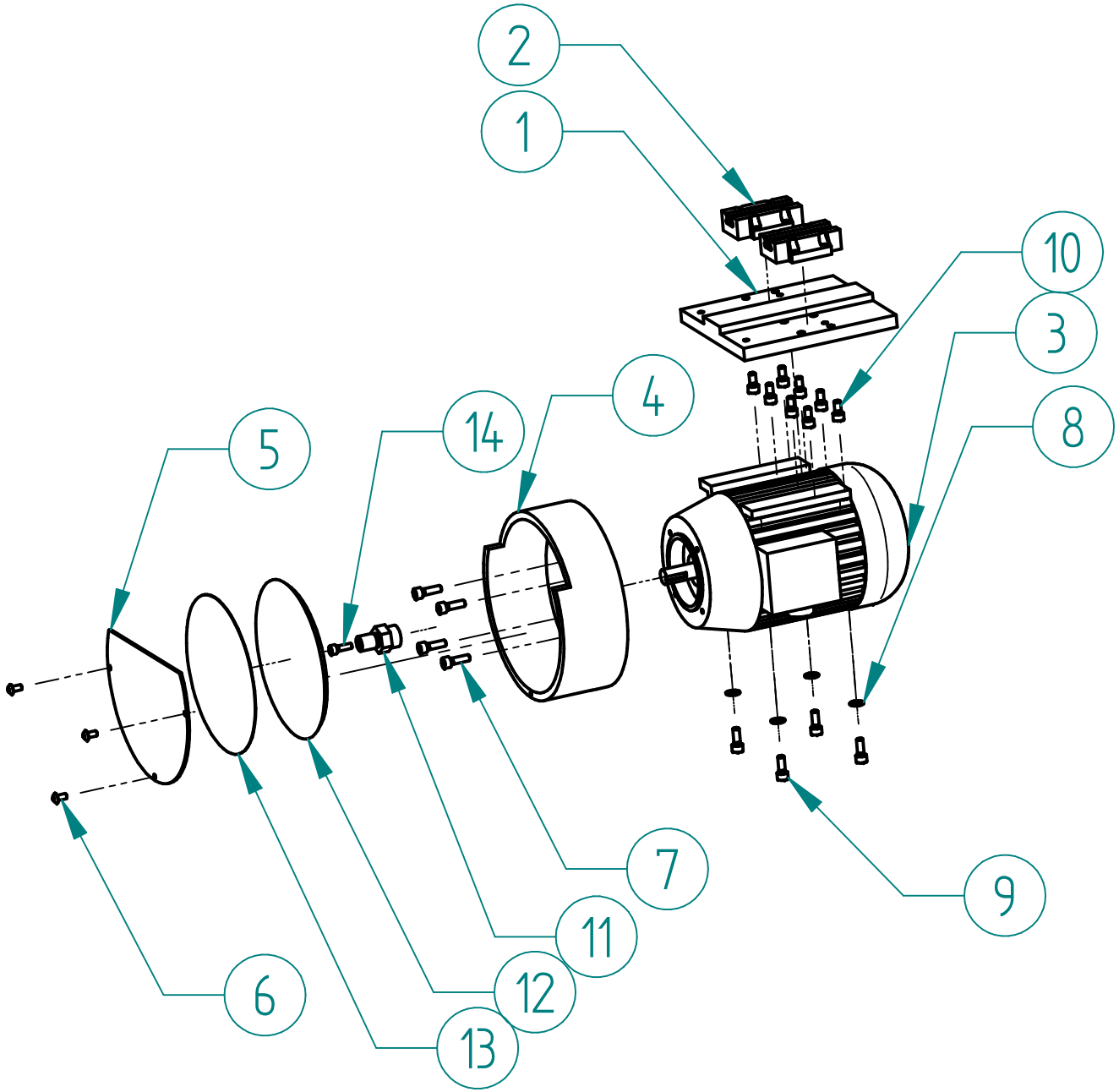

Item	File Name (no extension)	Quantity
	KNS – 00779 – TAS SL_RT GRINDER BACK EDGE GRINDING SYSTEM	
1	KNS – 00718 – TAS SL_RT GRINDER LINEAR BEARING&MOTOR HOUSING PLATE	1
2	GSP – 00453 – LLTHC 15 A TOP5 SKF BEARING – TAS SL BACK EDGE GRINDER LINEAR BEARING	2
3	GSP – 00622 – WAT 0_25 KW MOTOR – Q1E80M4-8C – TAS SL_RT GRINDER EMERY WHEEL MOTOR	1
4	KNS – 00721 – TAS SL_RT GRINDER EMERY WHEEL PROTECTION&MOTOR HOUSING	1
5	KNS – 00720 – TAS SL_RT GRINDER EMERY WHEEL FRONT PROTECTION COVER	1
6	GSP – 00233 – M5x10 LENTIL HEAD BOLT	3
7	GSP – 00023 – M6x20 IMBUS BOLT	4
8	GSP – 00274 – M6 WASHER	4
9	GSP – 00022 – M6X16 IMBUS BOLT	4
10	GSP – 00021 – M6X12 IMBUS BOLT	8
11	KNS – 00856 – TAS SL_RT EMERY WHEEL SHAFT	1
12	KNS – 00146 – SL_RT TYPE GRINDER BACK EDGE GRINDING PAPER HOLDER	1
13	KNS – 00105 – SL_RT TYPE GRINDER BACK EDGE GRINDING PAPER	1
14	GSP – 00014 – M5X16 IMBUS BOLT	1